SYSTEM ELECTIC LAYOUT - UPGRADE *39367

MTS Part number : 700-004-964
Revision : B
Date : 08/05/09
Responsible Engineer : Jacob Hildebrandt
Drafter : Jacob Hildebradt

Revision History

Rev	Description of Change	Dftr	ECN #	Date	Engr
B	Added Relief Valve and Estop Reset to DIO	JAH	Rule 1	10/4/09	JAH

Proprietary Data:
The information and design disclosed herein were originated by and are the property of MTS Systems Corporation, and may not be reproduced or disclosed in any form without the written consent of MTS Systems Corporation. MTS Systems Corporation reserves all patent, proprietary, design, manufacturing reproduction, use and sales rights hereto and to any article disclosed herein, except to the extent rights are expressly granted to others. The foregoing does not apply to vendor proprietary parts.

NCREE CONDUIT AND BOX LAYOUT

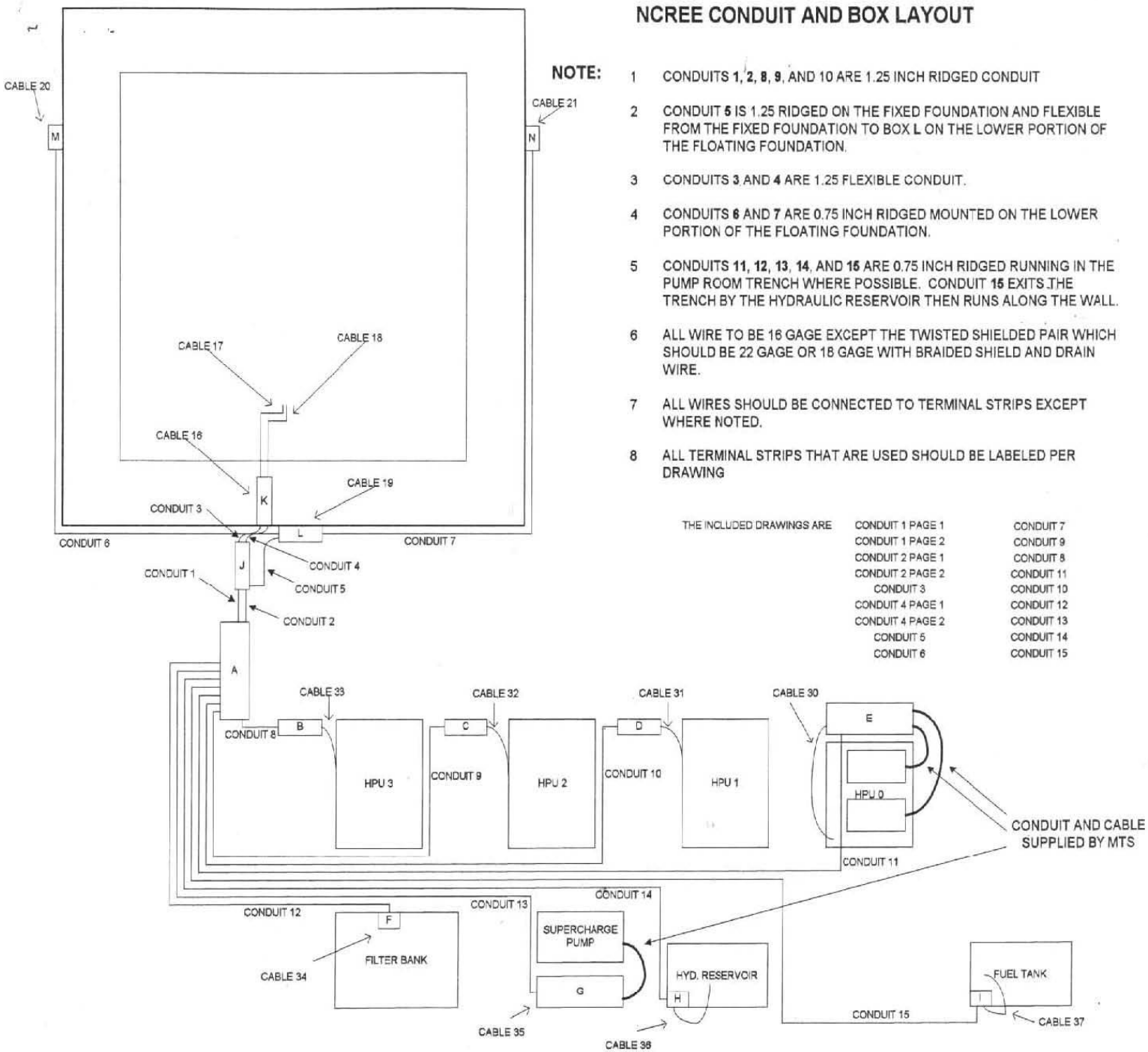

NOTE:

1. CONDUITS **1**, **2**, **8**, **9**, AND 10 ARE 1.25 INCH RIDGED CONDUIT
2. CONDUIT **5** IS 1.25 RIDGED ON THE FIXED FOUNDATION AND FLEXIBLE FROM THE FIXED FOUNDATION TO BOX **L** ON THE LOWER PORTION OF THE FLOATING FOUNDATION.
3. CONDUITS **3** AND **4** ARE 1.25 FLEXIBLE CONDUIT.
4. CONDUITS **6** AND **7** ARE 0.75 INCH RIDGED MOUNTED ON THE LOWER PORTION OF THE FLOATING FOUNDATION.
5. CONDUITS **11**, **12**, **13**, **14**, AND **15** ARE 0.75 INCH RIDGED RUNNING IN THE PUMP ROOM TRENCH WHERE POSSIBLE. CONDUIT **15** EXITS THE TRENCH BY THE HYDRAULIC RESERVOIR THEN RUNS ALONG THE WALL.
6. ALL WIRE TO BE 16 GAGE EXCEPT THE TWISTED SHIELDED PAIR WHICH SHOULD BE 22 GAGE OR 18 GAGE WITH BRAIDED SHIELD AND DRAIN WIRE.
7. ALL WIRES SHOULD BE CONNECTED TO TERMINAL STRIPS EXCEPT WHERE NOTED.
8. ALL TERMINAL STRIPS THAT ARE USED SHOULD BE LABELED PER DRAWING

THE INCLUDED DRAWINGS ARE

CONDUIT 1 PAGE 1	CONDUIT 7
CONDUIT 1 PAGE 2	CONDUIT 9
CONDUIT 2 PAGE 1	CONDUIT 8
CONDUIT 2 PAGE 2	CONDUIT 11
CONDUIT 3	CONDUIT 10
CONDUIT 4 PAGE 1	CONDUIT 12
CONDUIT 4 PAGE 2	CONDUIT 13
CONDUIT 5	CONDUIT 14
CONDUIT 6	CONDUIT 15

This information must not be disclosed or copied without written permission from MTS. 700-004-964 Rev B Page 2 of 43

PLC to flex link (sump and static)

CONDUIT 1 PAGE 1 changed 1-27-97 by Bob O'Neil

Main PLC Cabinet A	flexible link cabinet J	
I0415	I0415	SUMP PUMP RUNNING
I0309	I0309	PIT E-STOP
I0310	I0310	PIOLET FILTER SW
I0311	I0311	PILOT PRESSURE SW
I0312	I0312	SUMP PUMP POWER
I0313	I0313	SUMP PUMP OVER LEVEL
I0314	I0314	SUMP PUMP FILTER WARNING 35 PSI
I0315	I0315	SUMP PUMP FILTER LIMIT 70 PSI
1	IPC01	+24 VOLTS
O0504	O0504	SPARE
O0505	O0505	SPARE
O0506	O0506	SPARE
O0507	O0507	SPARE
2	OPC01	COMMON
I0308	I0308	TUNNEL E-STOP
SW4	SW4	E-STOP PIT A
SW5	SW5	E-STOP PIT B
O0700	O0700	STATIC SUPPORT A SOLENOID
O0701	O0701	STATIC SUPPORT B SOLENOID
O0702	O0702	STATIC SUPPORT C SOLENOID
O0703	O0703	STATIC SUPPORT D SOLENOID
O0704	O0704	STATIC SUPPORT INCREASE SOLENOID
O0705	O0705	STATIC SUPPORT DECREASE SOLENOID
SW2	SW2	SPARE
SW3	SW3	SPARE
2	OPC02	COMMON
O0706	O0706	SPARE
O0707	O0707	SPARE
2	OPC03	COMMON

PLC to flexible link (foundation sys)

CONDUIT 1 PAGE 2 changed 1-27-97 by Bob O'Neil

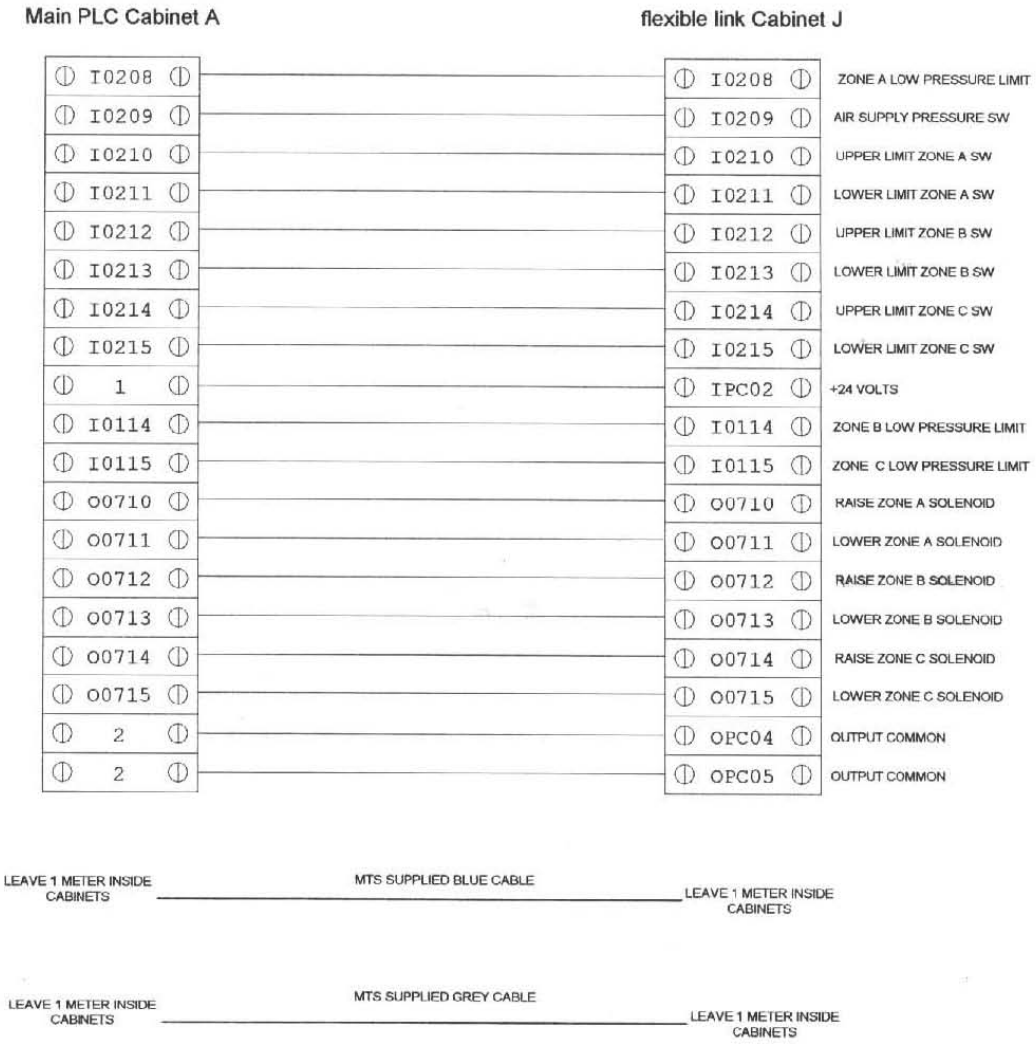

PLC to flexible link (system analog)

CONDUIT 2 PAGE 1 changed 1-27-97 by Bob O'Neil

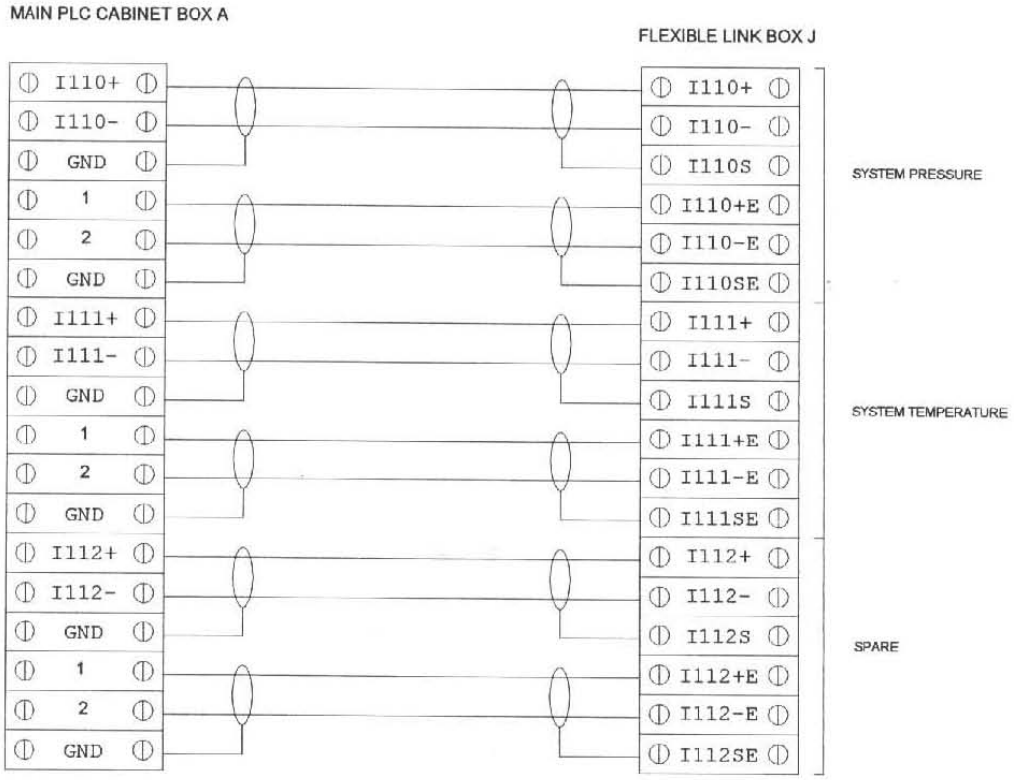

PLC to flexible link (static support analog)

CONDUIT 2 PAGE 2

changed 12-16-96 by Bob O'Neil

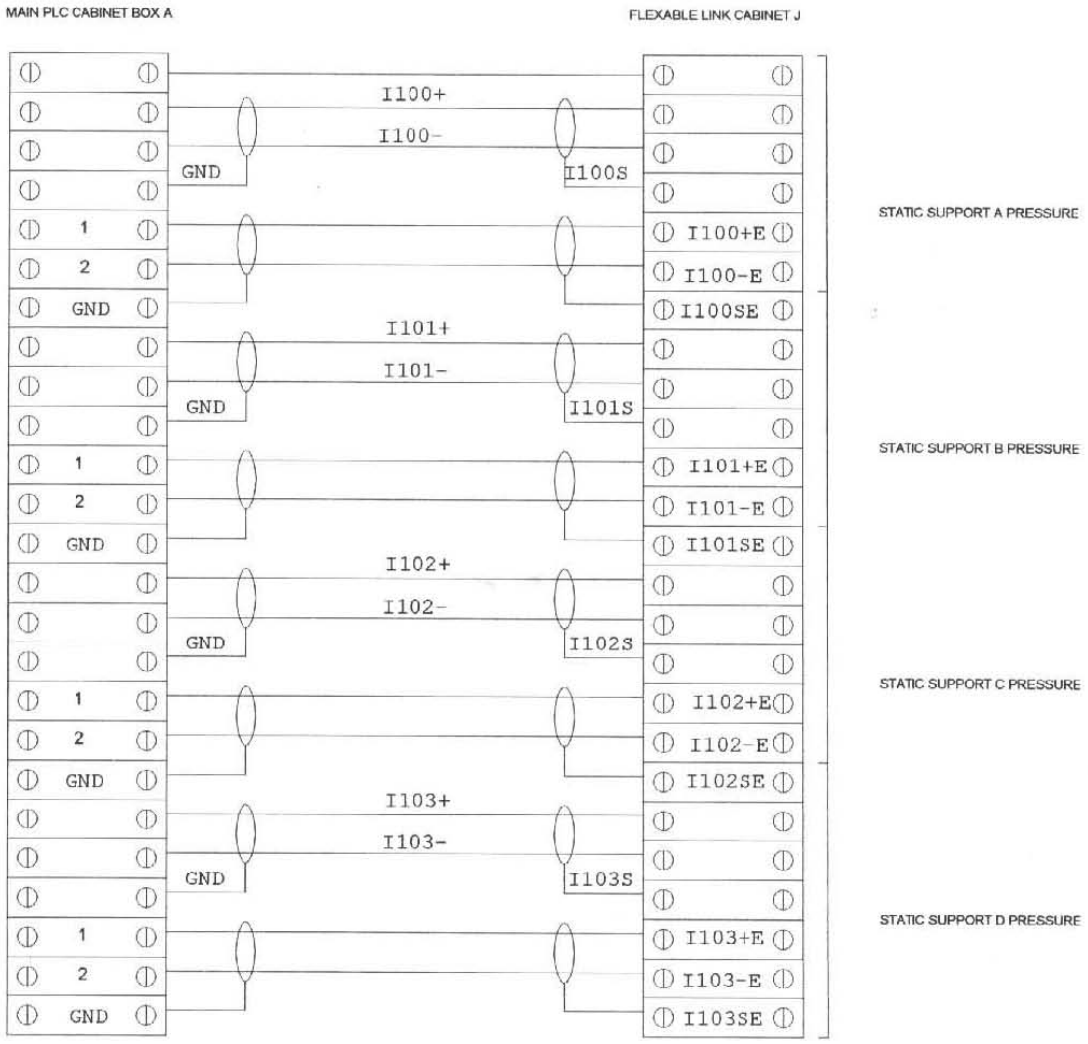

flex link (sump and static)

CONDUIT 3 changed 1-27-97 by Bob O'Neil

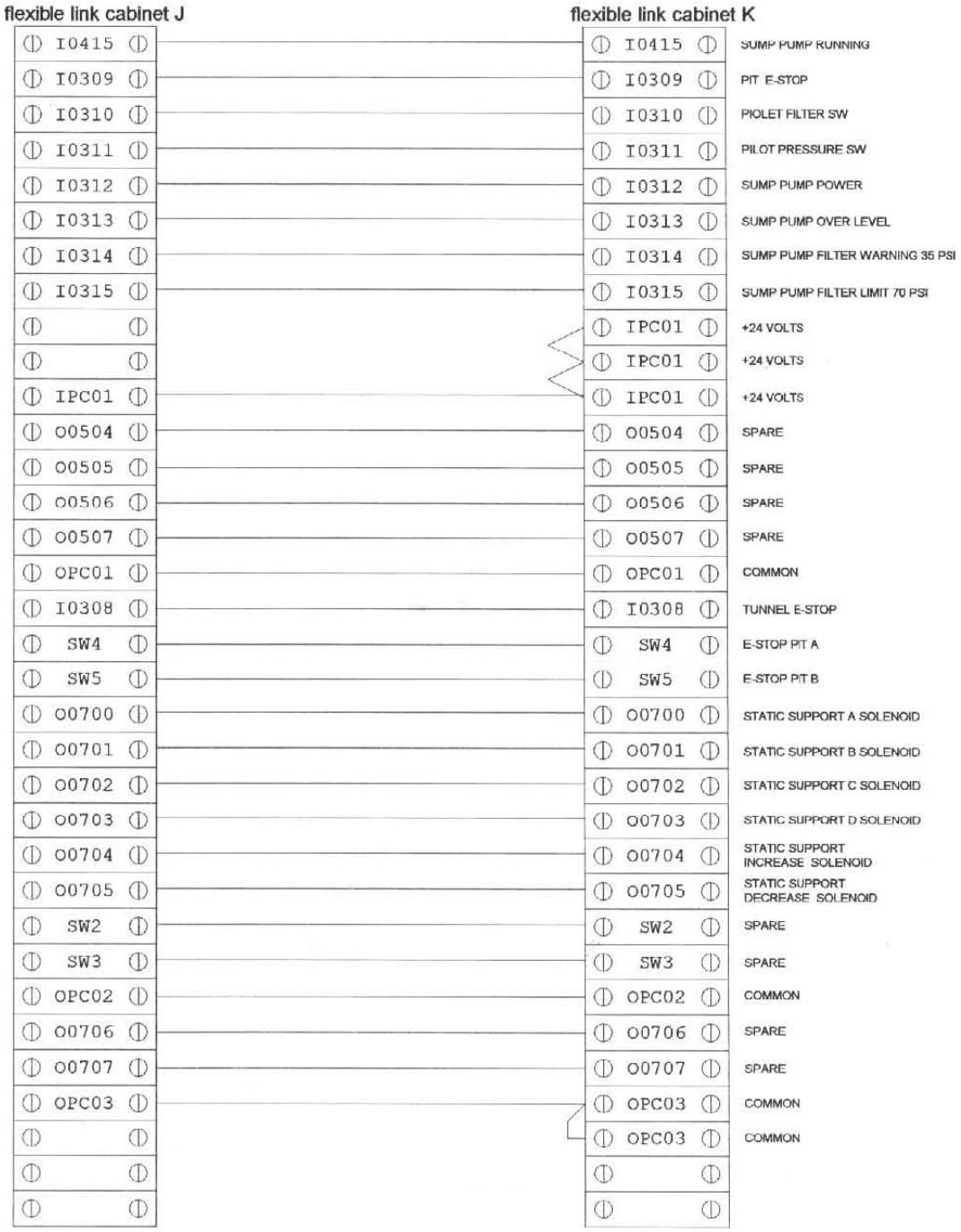

flexible link (system analog)

CONDUIT 4 PAGE 1

changed 1-27-97 by Bob O'Neil

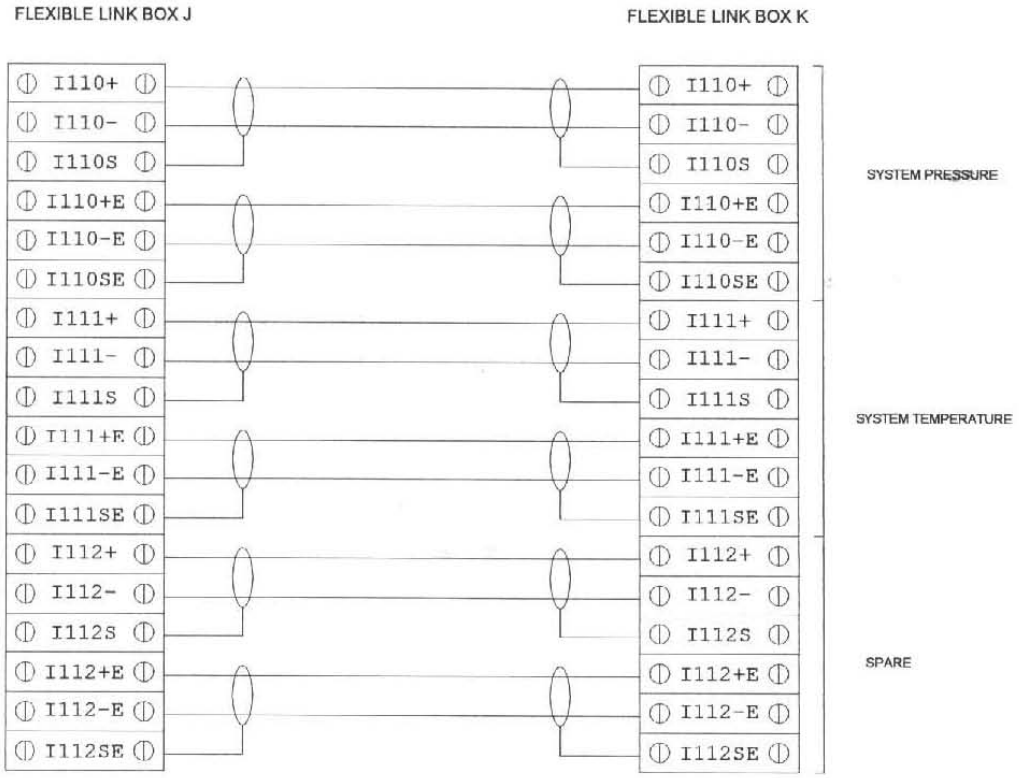

flexible link (static support analog)

CONDUIT 4 PAGE 2

changed 12-17-96 by Bob O'Neil

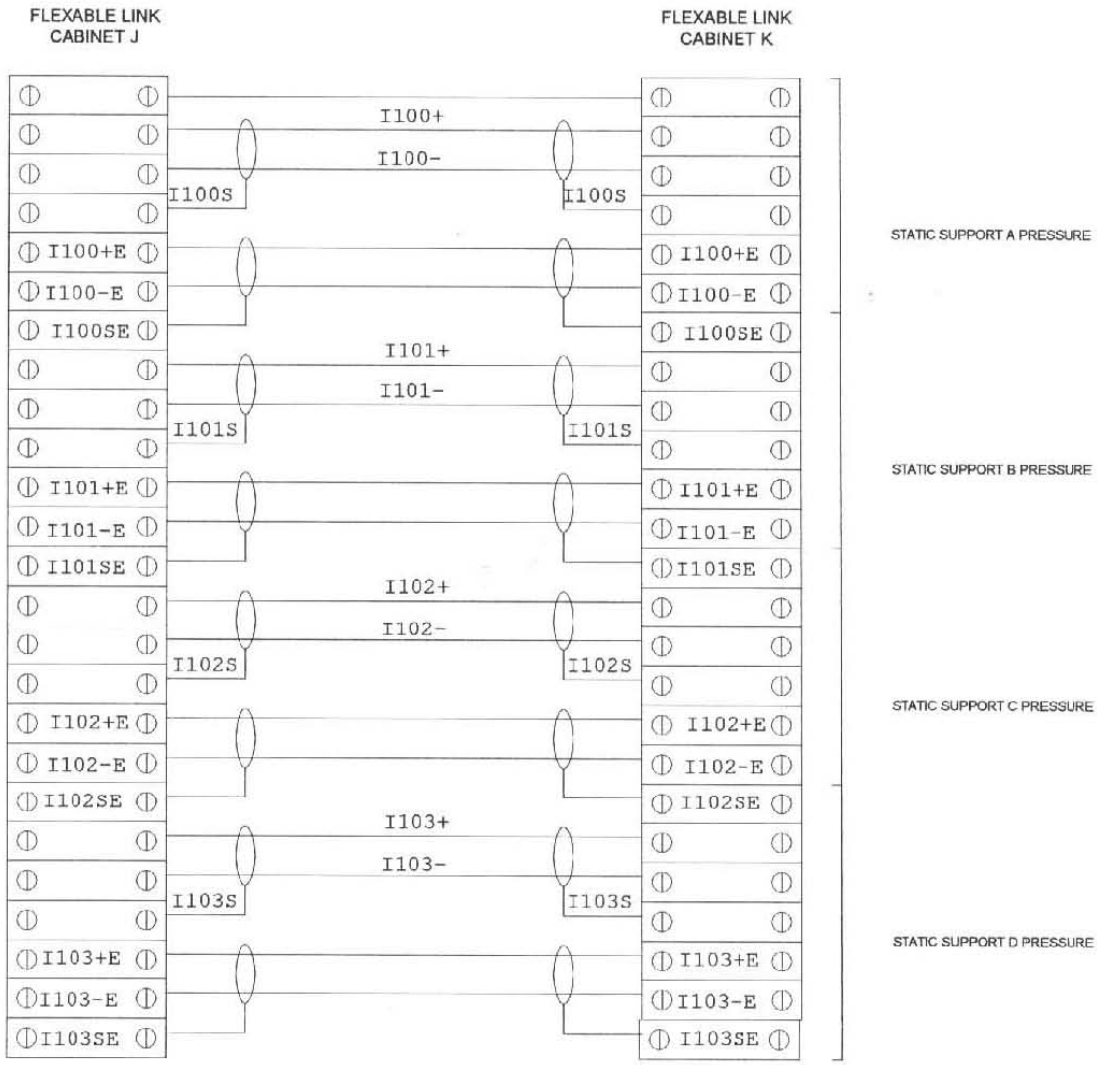

flexible link to foundation box L

CONDUIT 5 changed 1-27-97 by Bob O'Neil

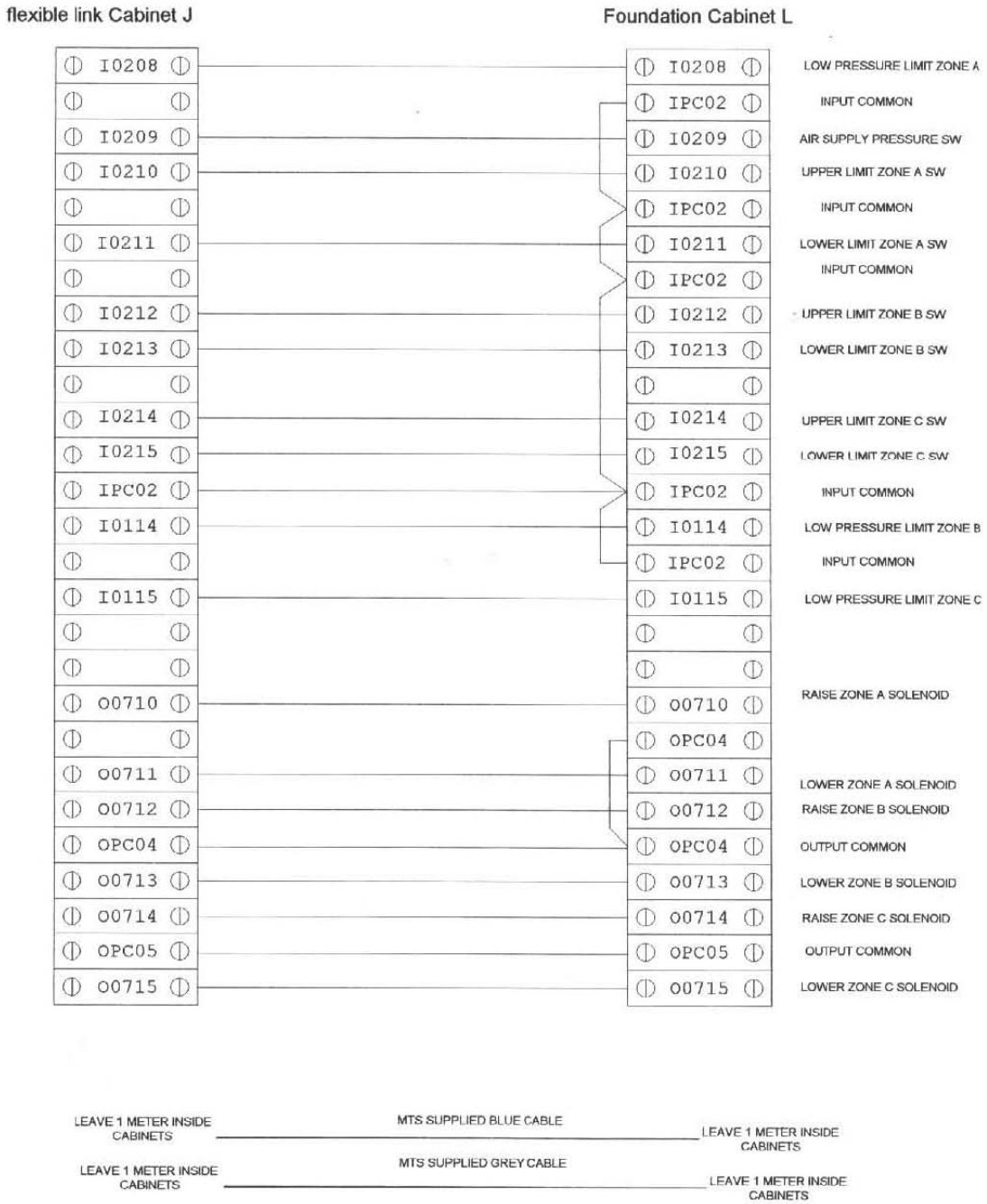

foundation box L to box M

CONDUIT 6

changed 1-27-97 by Bob O'Neil

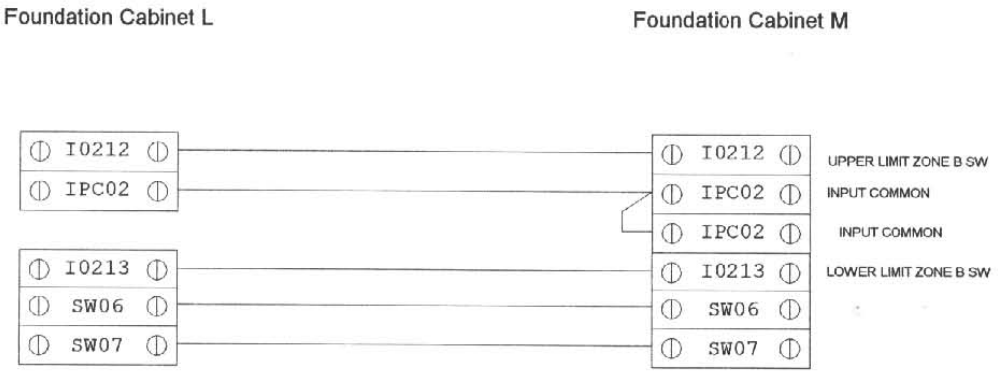

foundation box L to box N

CONDUIT 7

changed 1-27-97 by Bob O'Neil

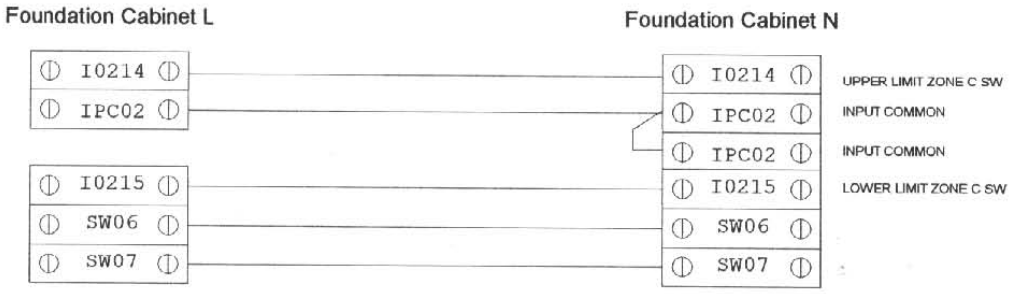

PLC to HPU3 cable

CONDUIT 8

changed 1-27-97 by Bob O'Neil

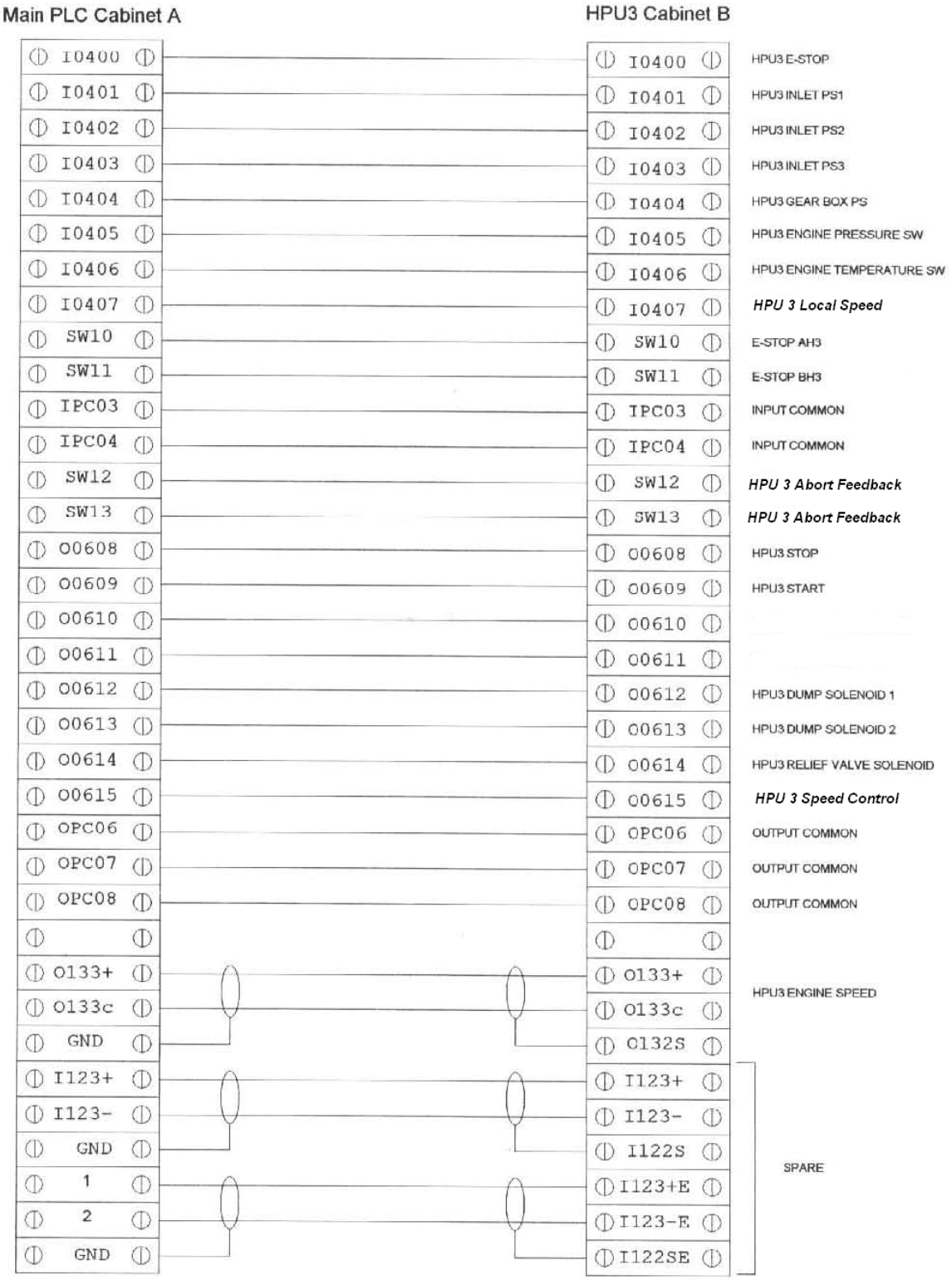

PLC to HPU2 cable

CONDUIT 9 changed 1-27-97 by Bob O'Neil

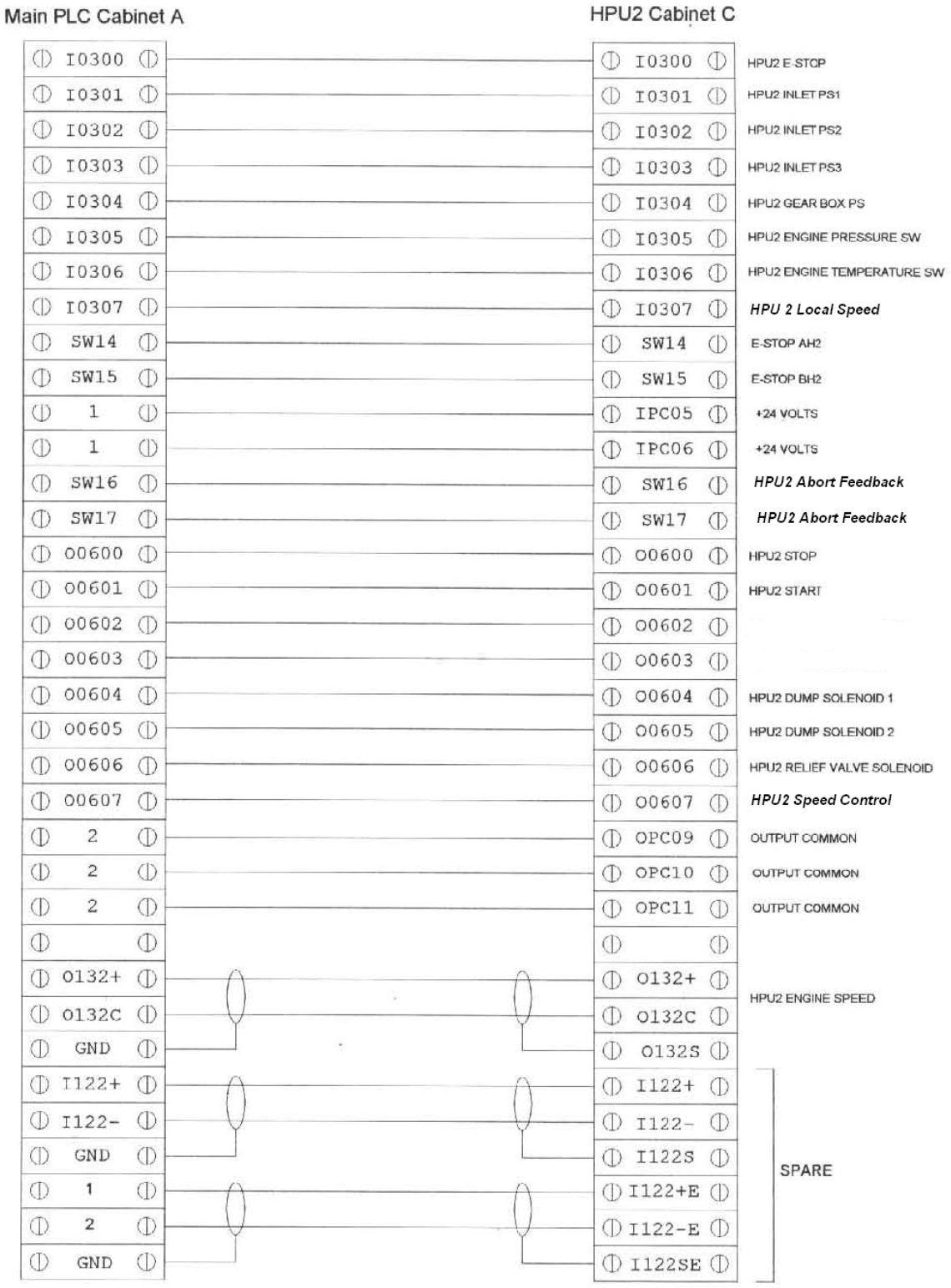

PLC to HPU1 cable

changed 1-27-97 by Bob O'Neil

CONDUIT 10

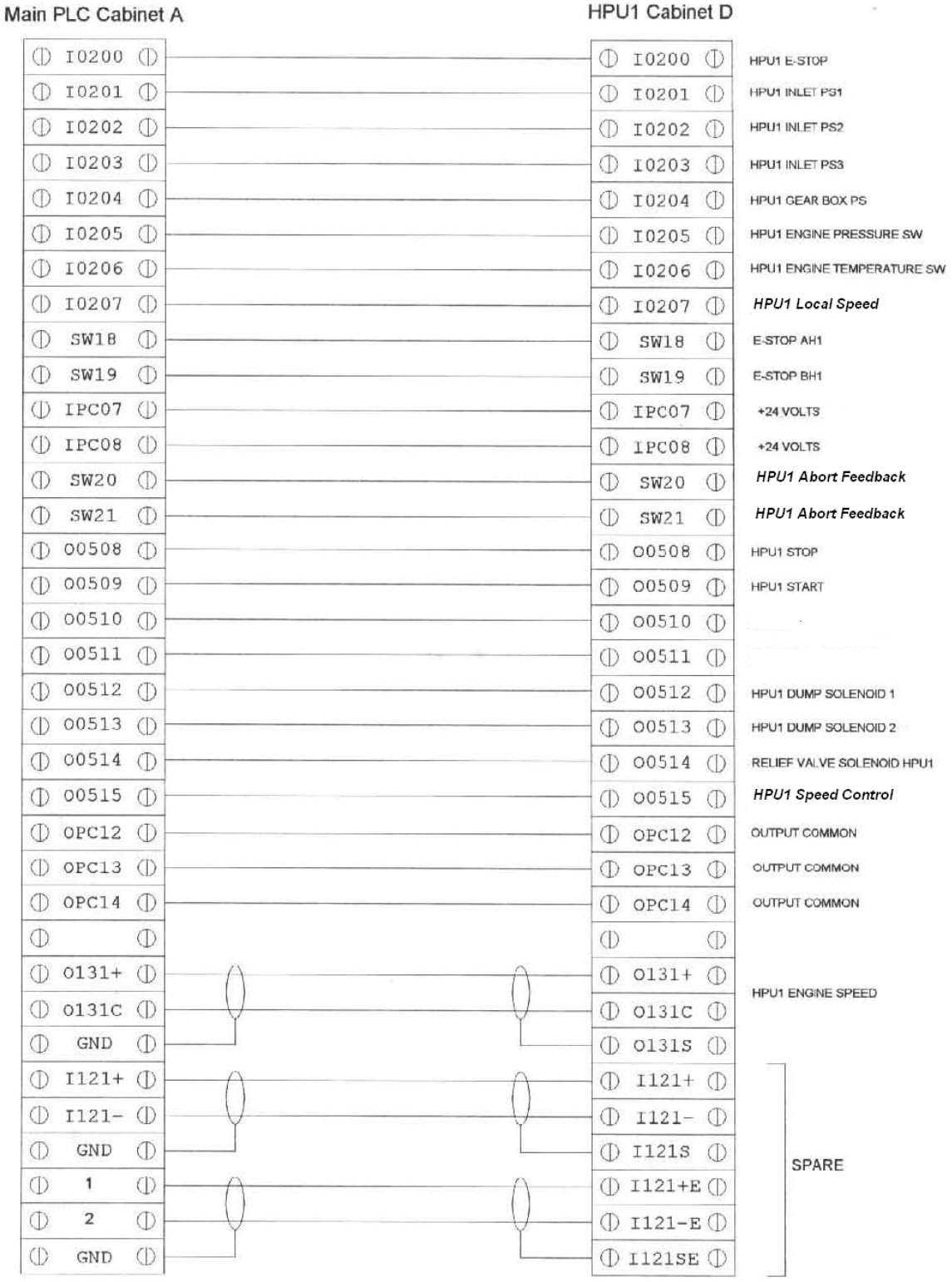

PLC to HPU0 cable

CONDUIT 11

changed 1-27-97 by Bob O'Neil

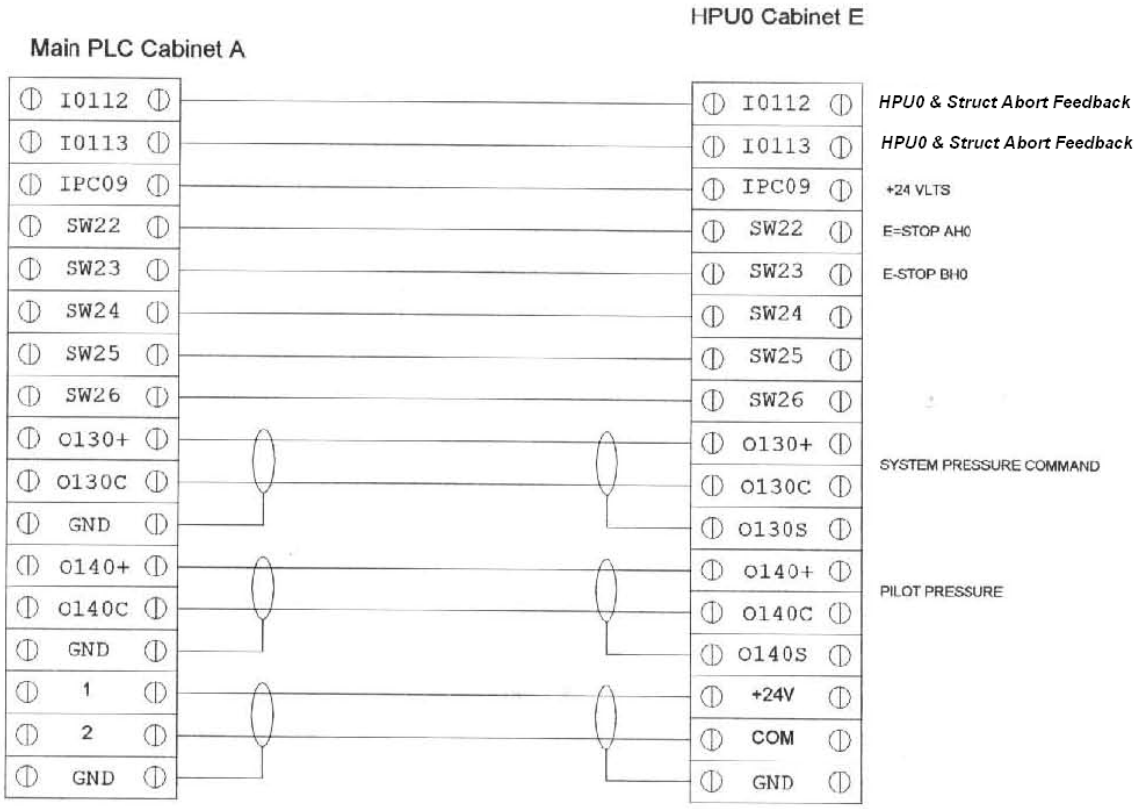

LEAVE 1 METER INSIDE CABINETS — MTS SUPPLIED BLUE CABLE — LEAVE 1 METER INSIDE CABINETS

LEAVE 1 METER INSIDE CABINETS — MTS SUPPLIED GREY CABLE — LEAVE 1 METER INSIDE CABINETS

PLC to filter bank BOX F

CONDUIT 12

changed 1-27-97 by Bob O'Neil

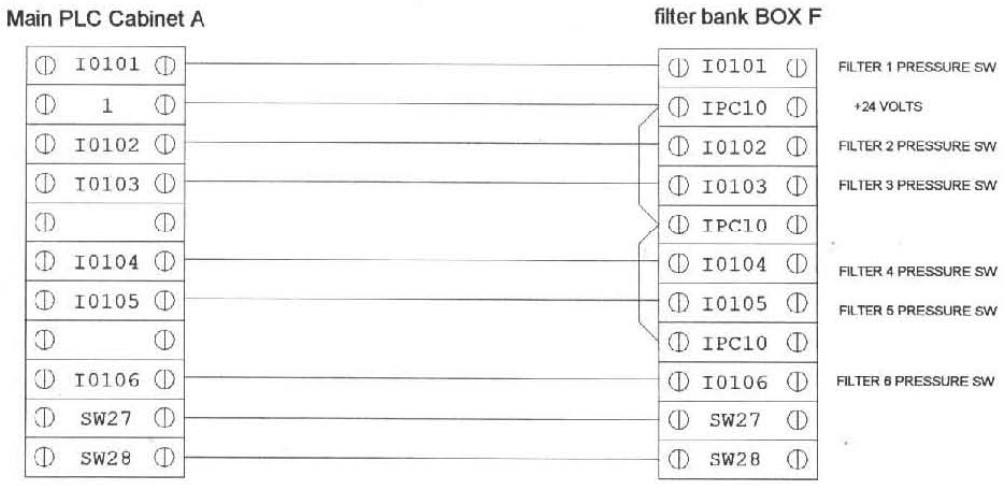

PLC to super charge pump

CONDUIT 13

changed 1-27-97 by Bob O'Neil

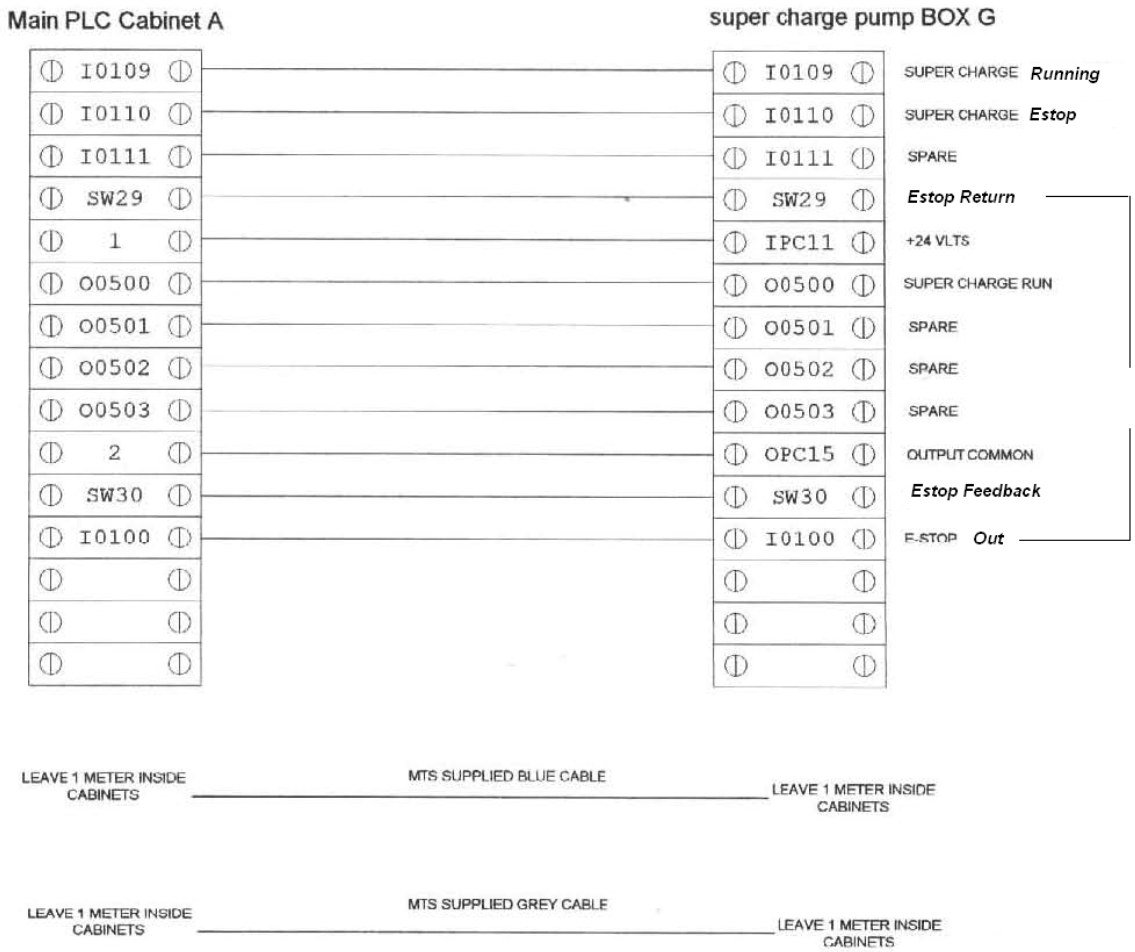

PLC to hyd res

CONDUIT 14

changed 1-27-97 by Bob O'Neil

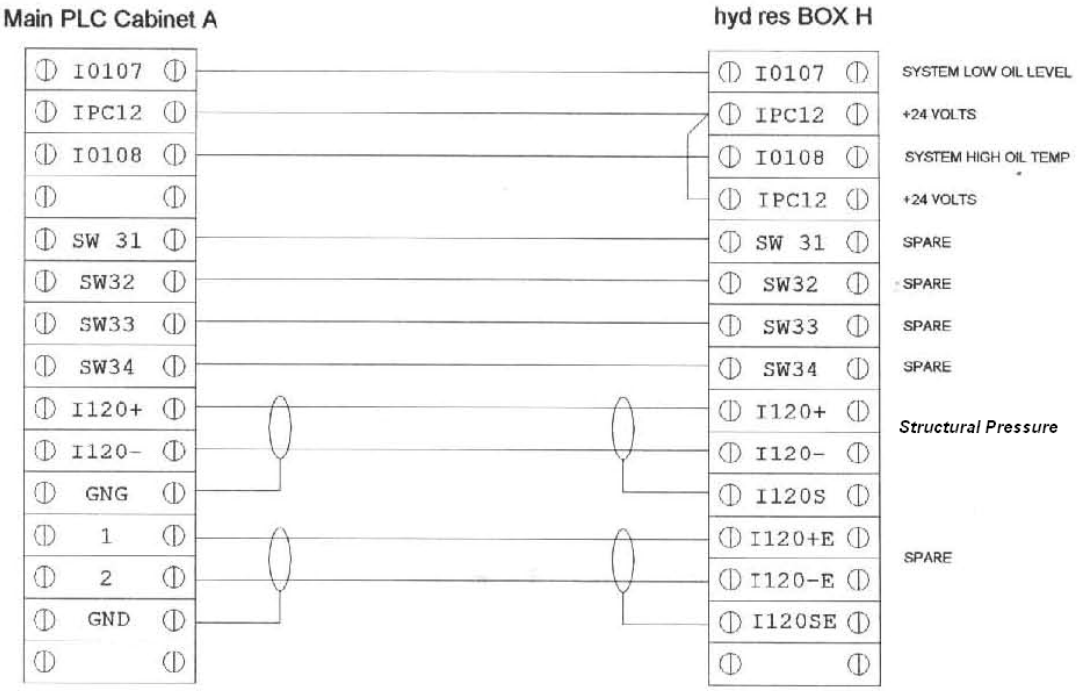

PLC to fuel tank

CONDUIT 15

changed 1-27-97 by Bob O'Neil

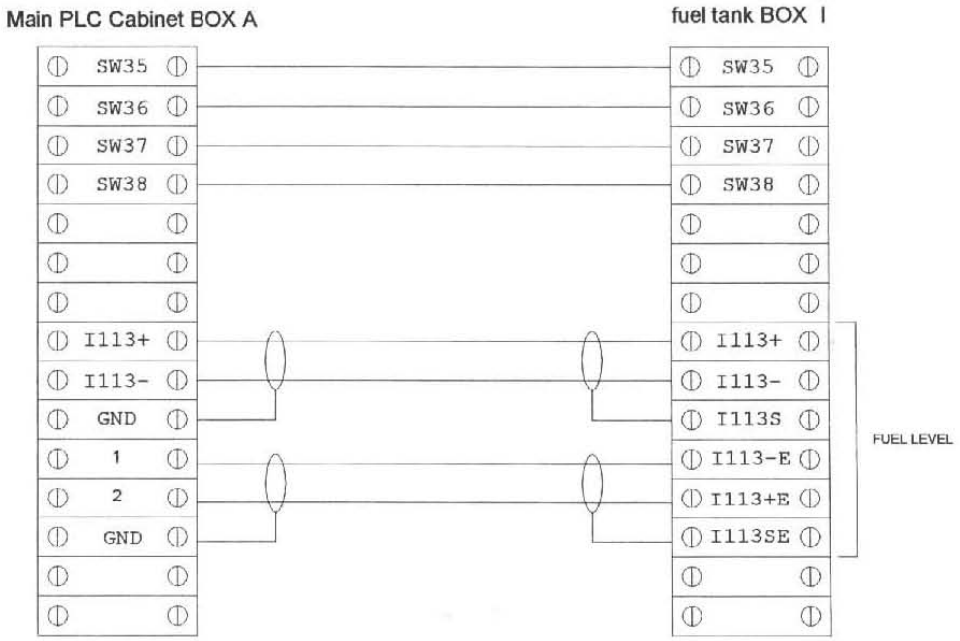

flex link (sump and static)

CABLE 16

flexible link cabinet K

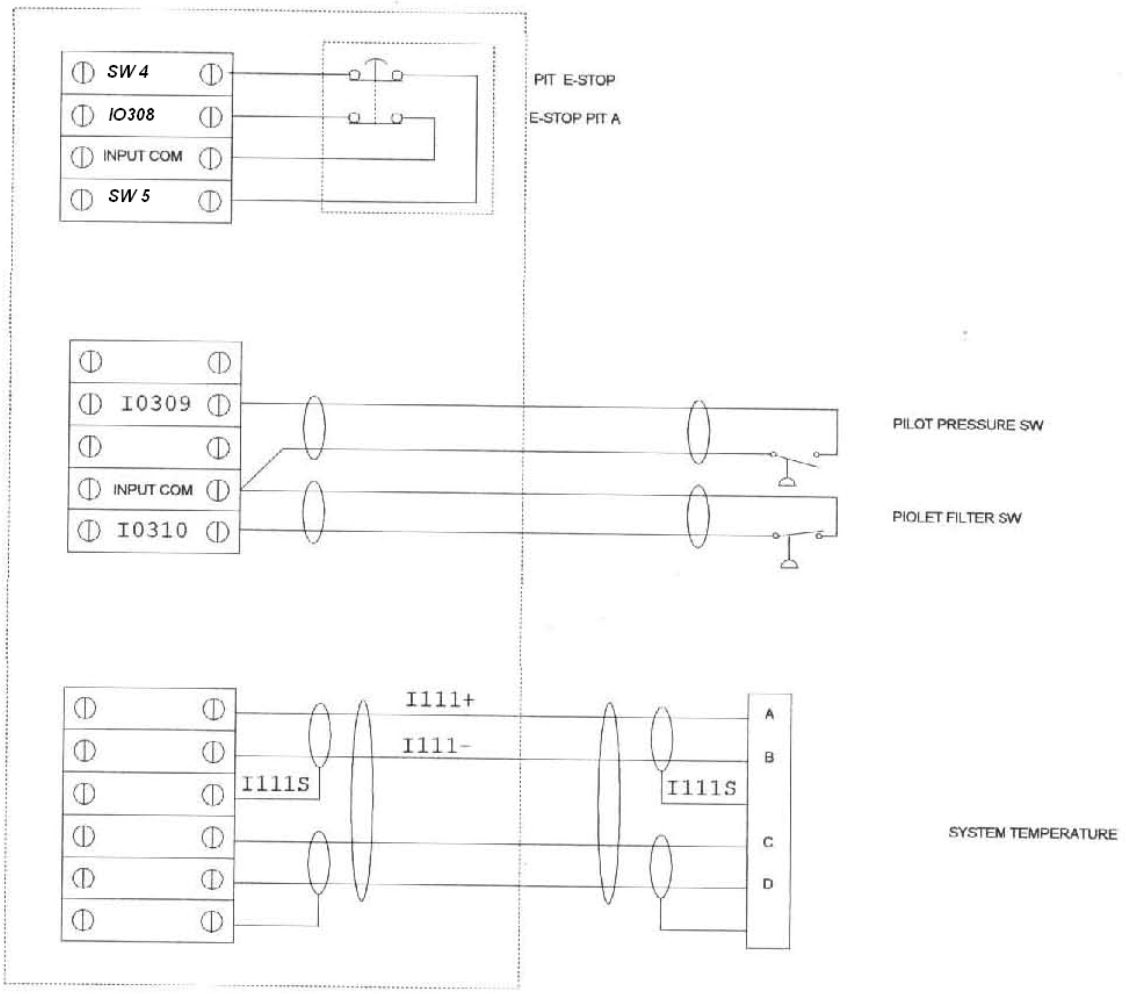

Cable 17

FLEXIBLE LINK BOX K

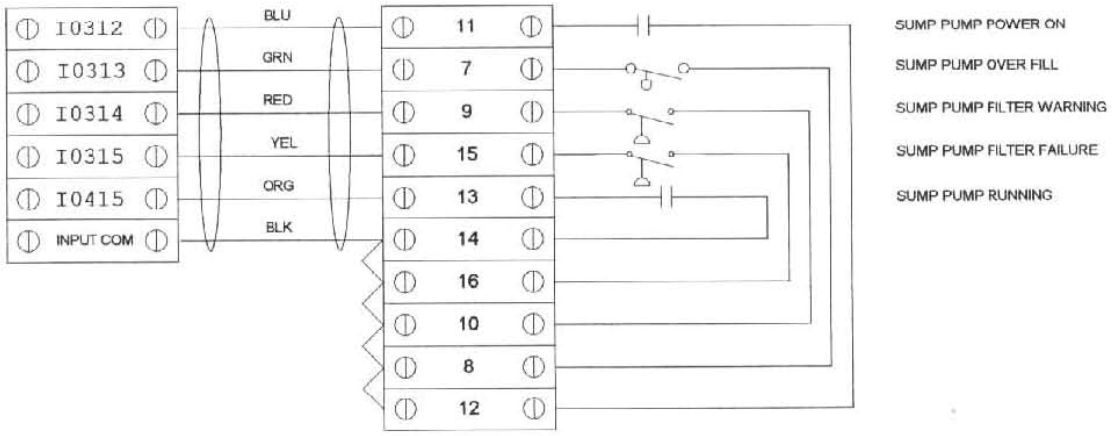

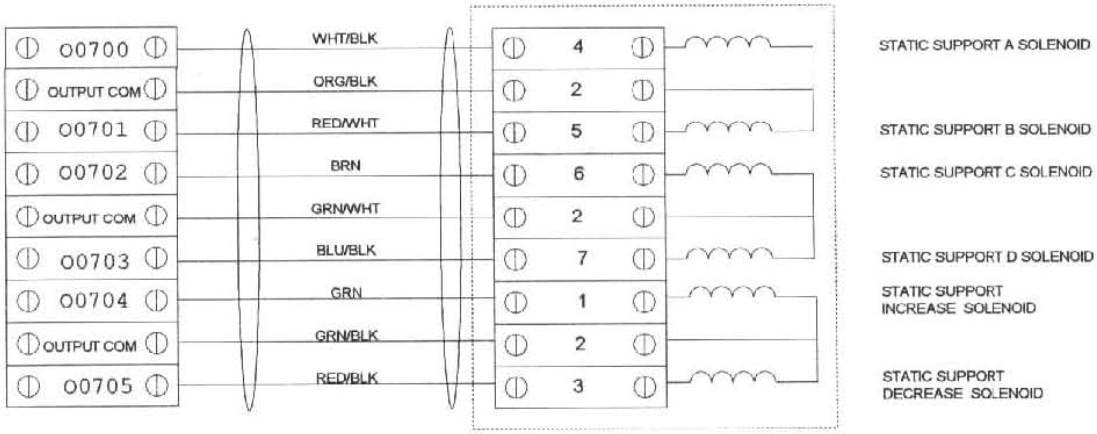

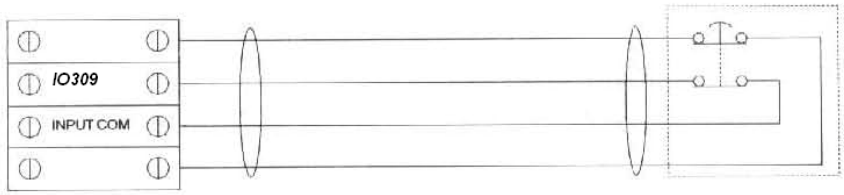

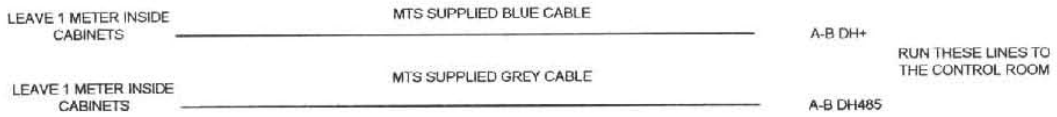

Cable 18

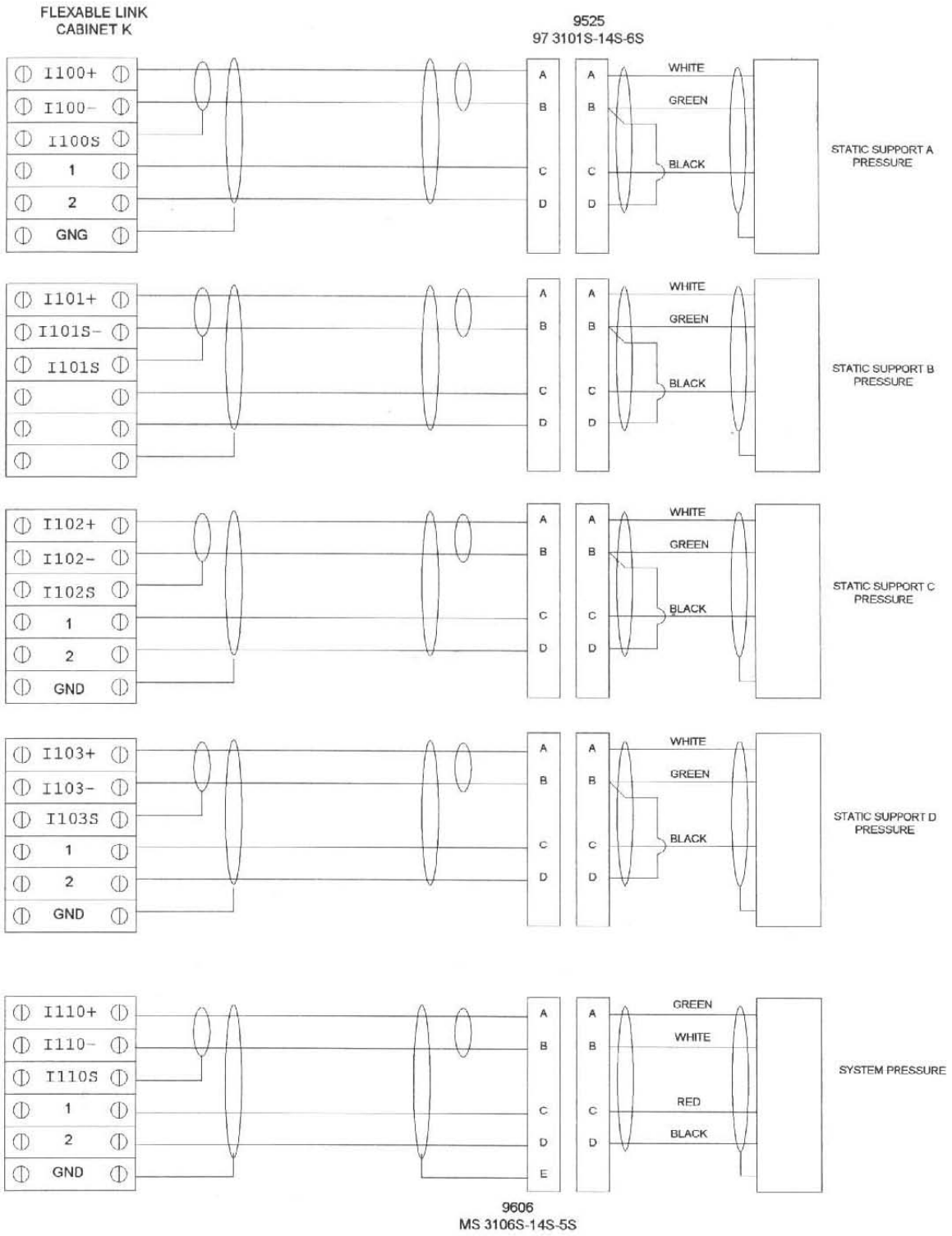
FLEXABLE LINK
CABINET K
9525
97 3101S-14S-6S
I100+
I100-
I100S
1
2
GNG
WHITE
GREEN
BLACK
STATIC SUPPORT A
PRESSURE
I101+
I101S-
I101S
STATIC SUPPORT B
PRESSURE
I102+
I102-
I102S
1
2
GND
STATIC SUPPORT C
PRESSURE
I103+
I103-
I103S
1
2
GND
STATIC SUPPORT D
PRESSURE
I110+
I110-
I110S
1
2
GND
GREEN
WHITE
RED
BLACK
SYSTEM PRESSURE
9606
MS 3106S-14S-5S

from box L

Foundation system

Cable 19

changed 1-27-97 by Bob O'Neil

Foundation Cabinet L

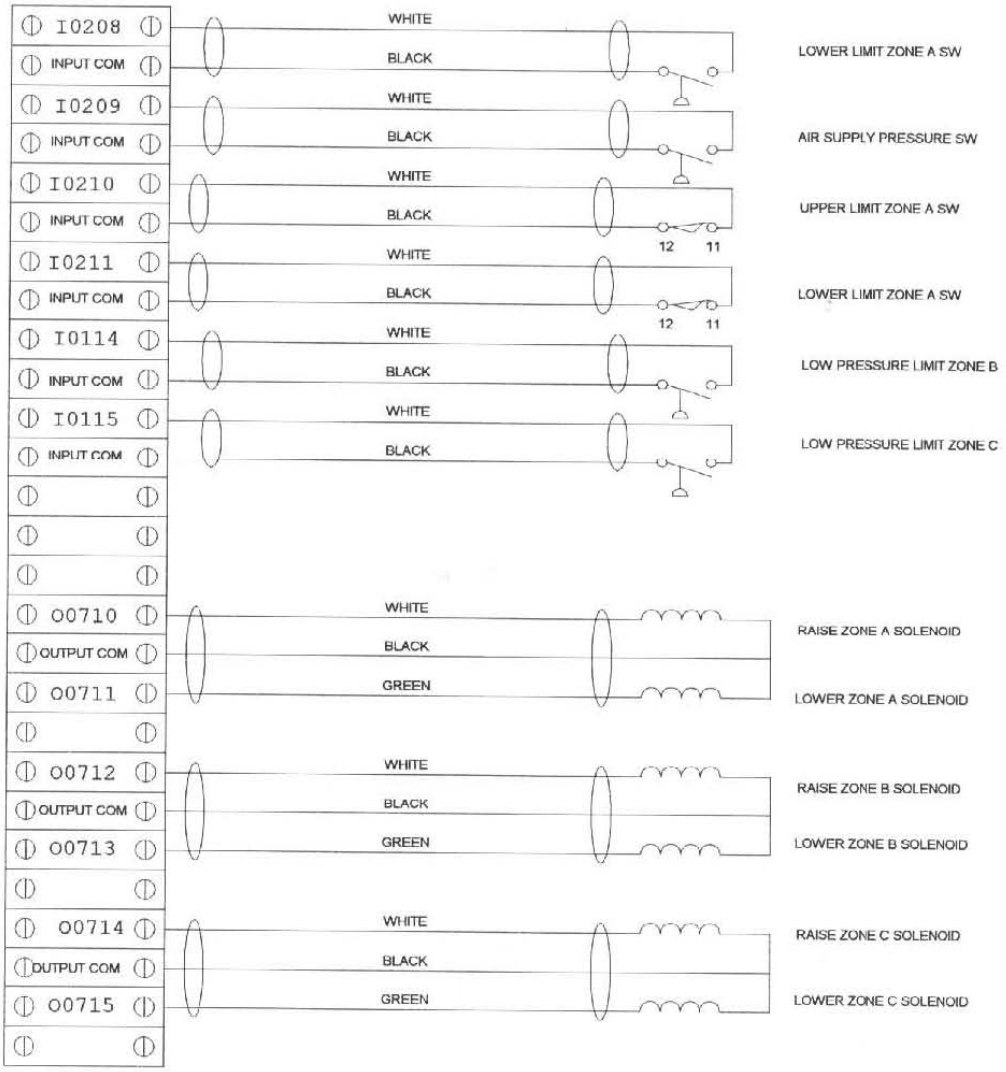

from box M
Cable 20

Foundation Cabinet M

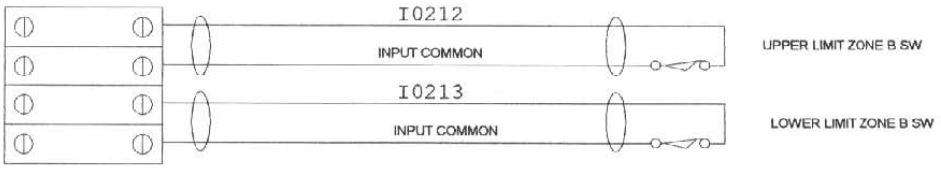

from box N

Cable 21

Foundation Cabinet N

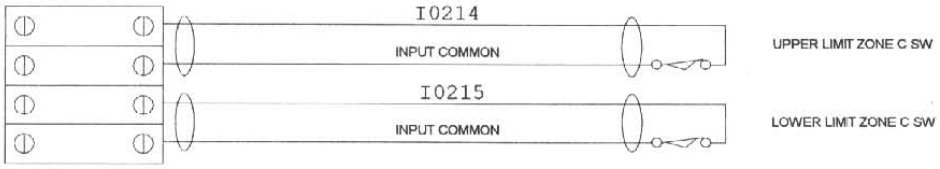

HPU0
external cable

Cable 30

HPU0 Cabinet E

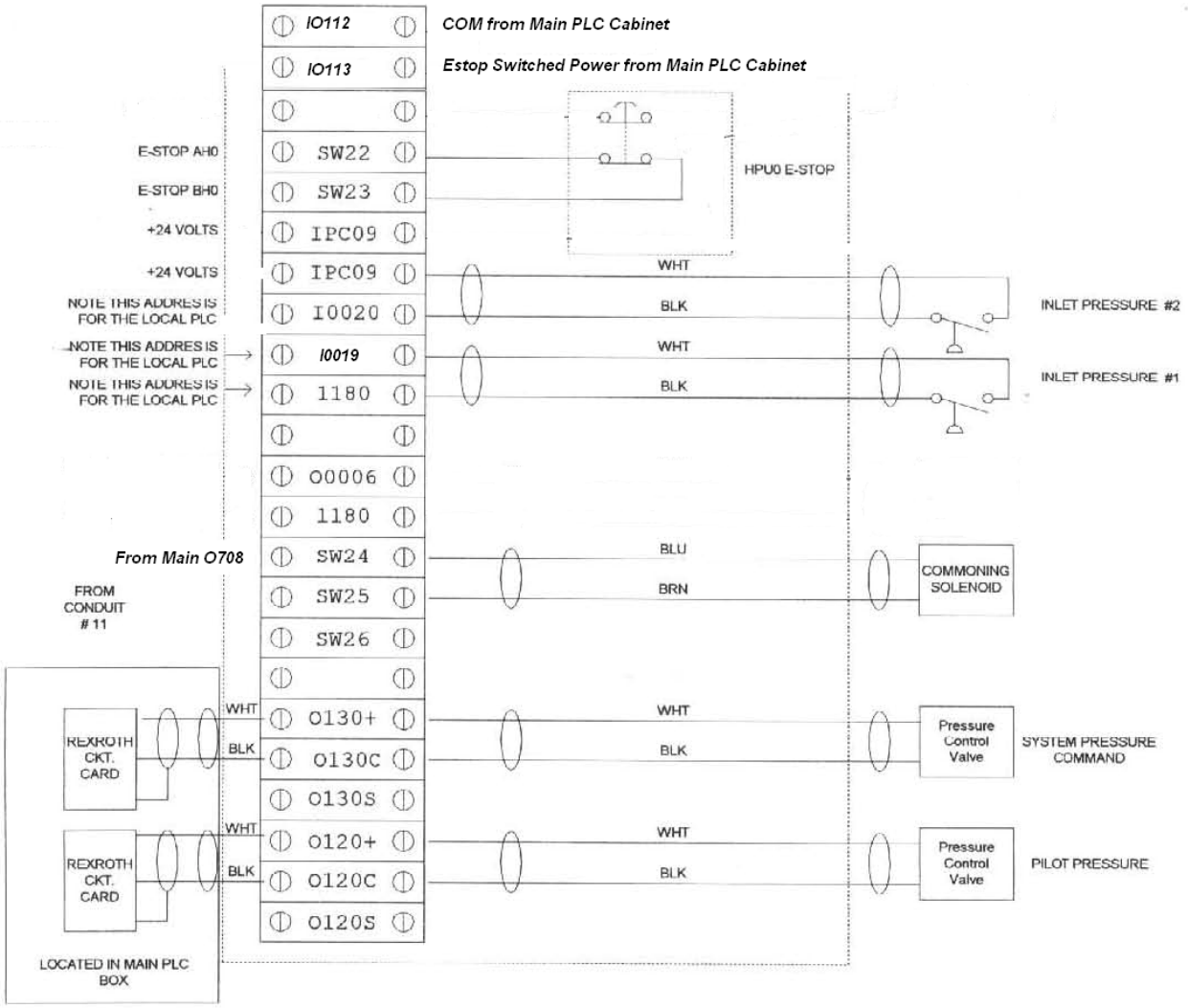

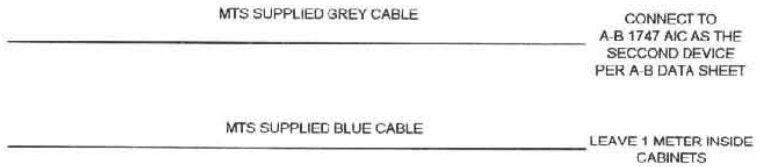

HPU1 box D
cables to device

changed 1-27-97 by Bob O'Neil

Cable 31

HPU1 Cabinet D

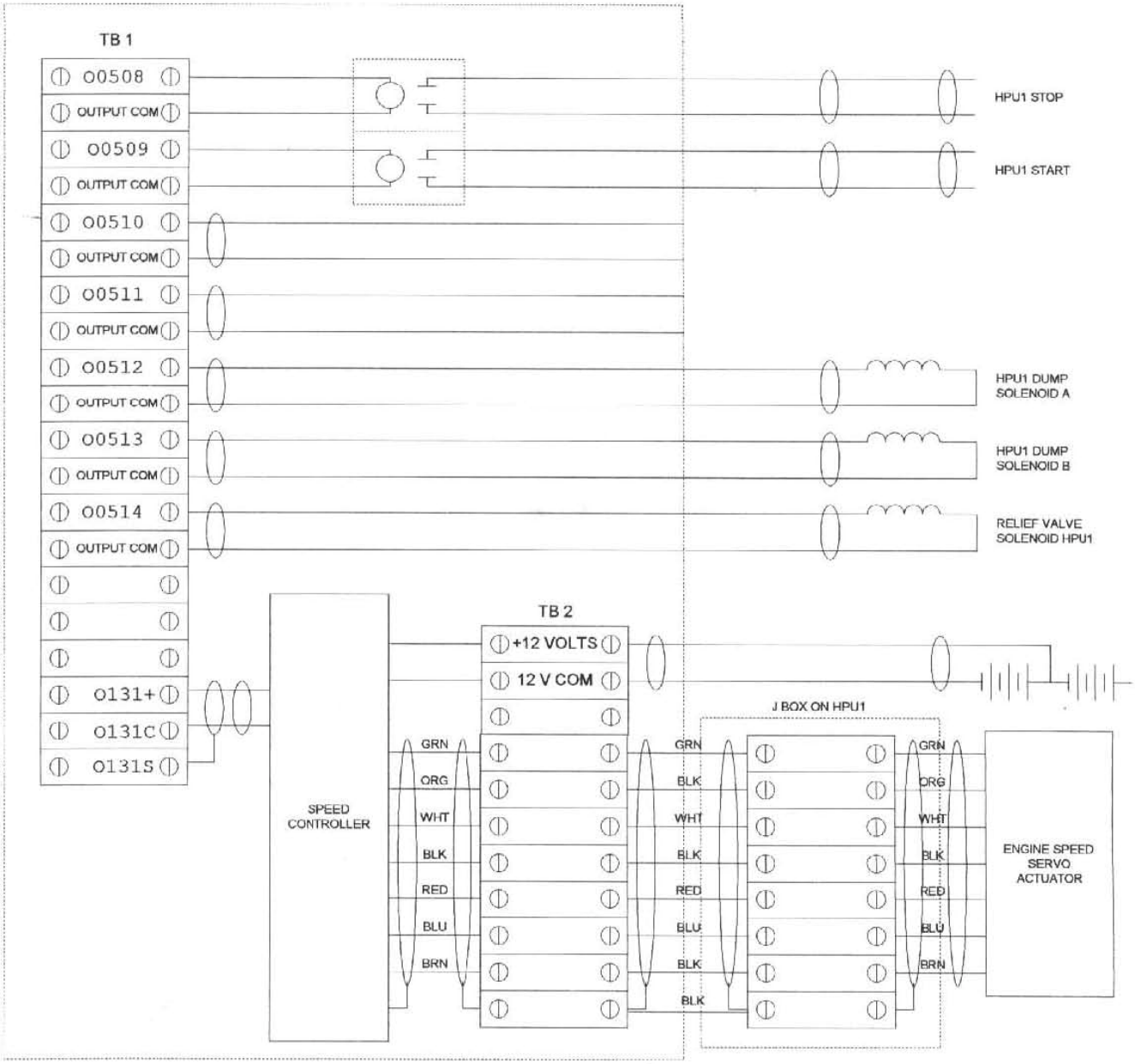

HPU1 box D
cables to device

changed 1-27-97 by Bob O'Neil

Cable 31

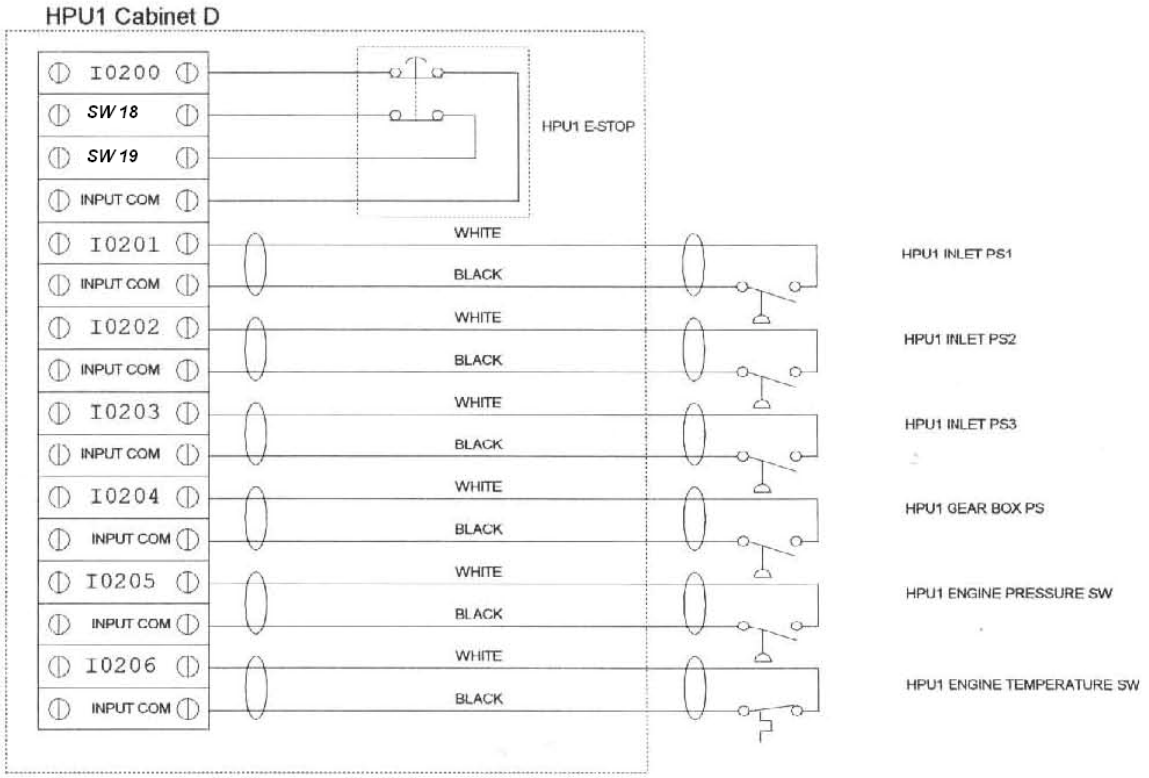

HPU2 box c
cables to device

Cable 32

changed 1-27-97 by Bob O'Neil

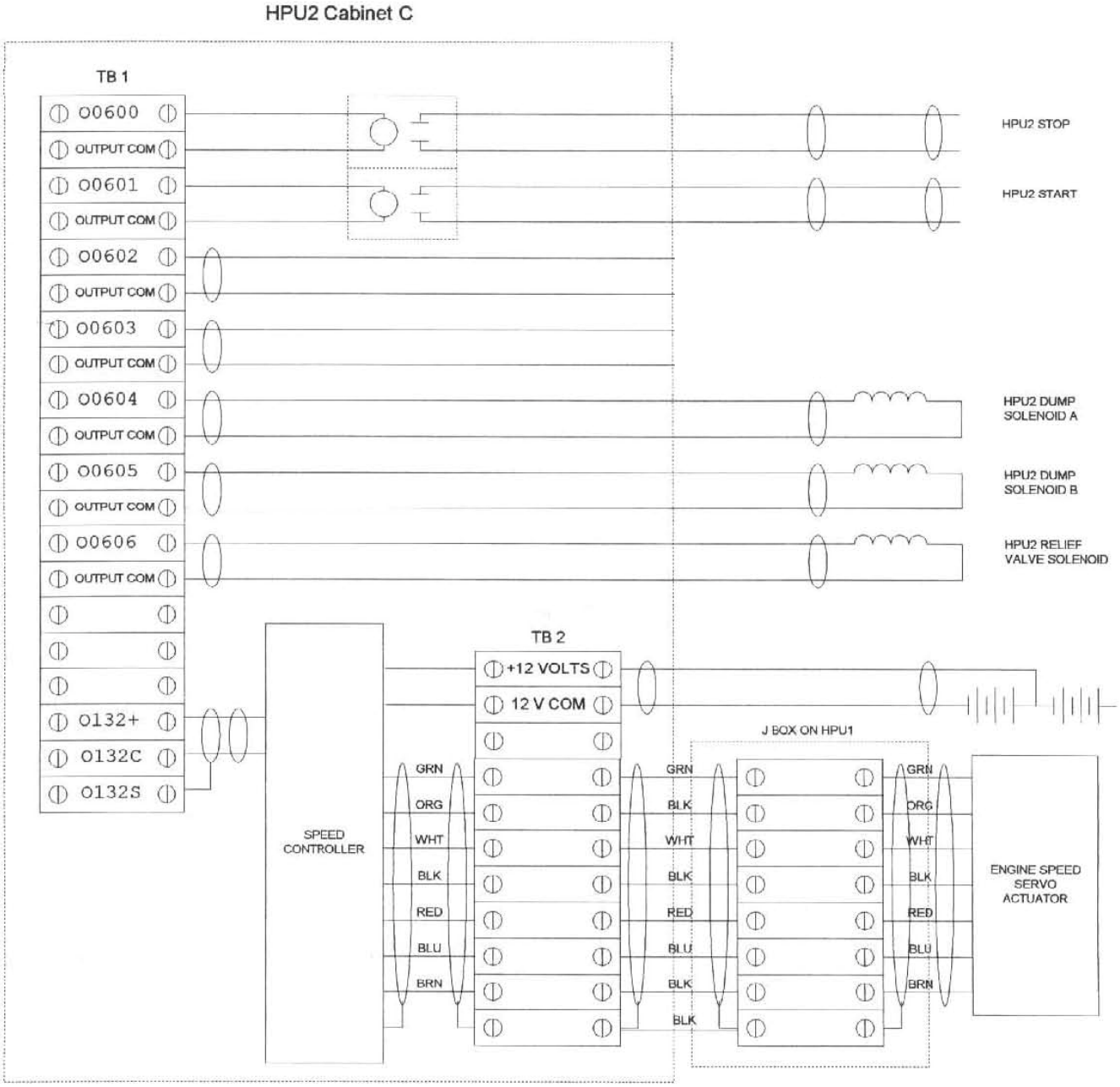

HPU2 box c
cables to device

changed 1-27-97 by Bob O'Neil

Cable 32

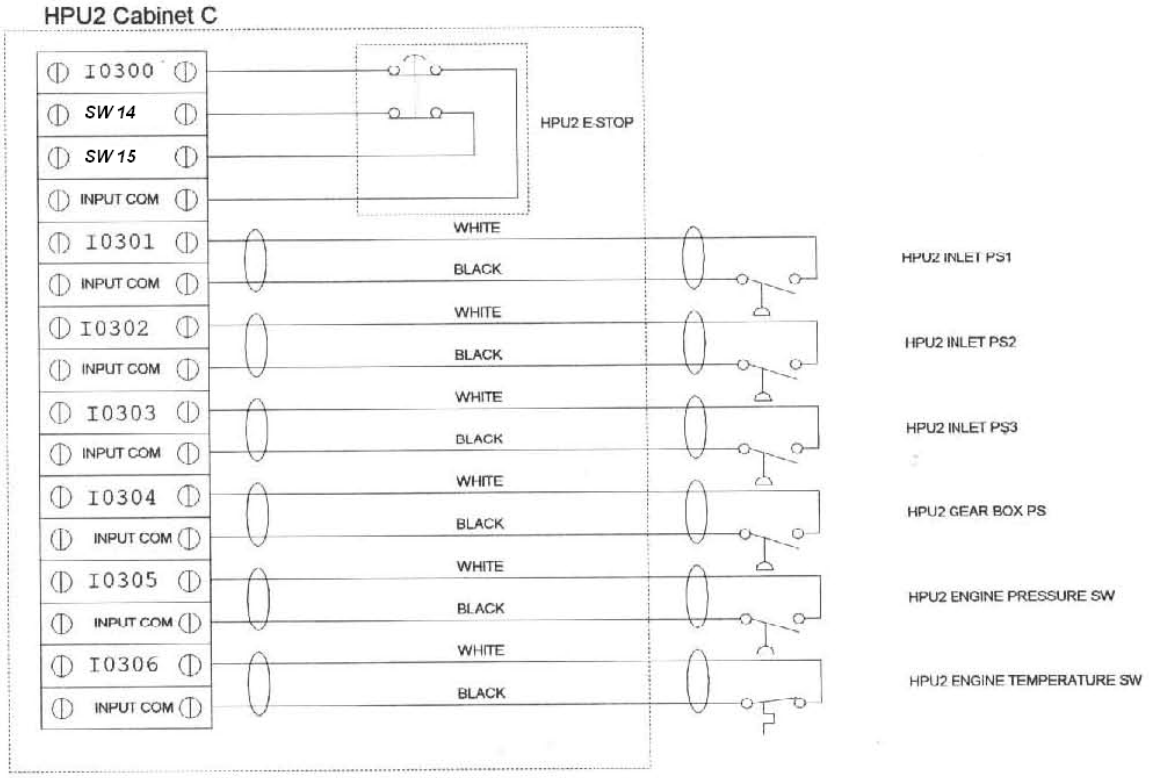

HPU3 box B
cables to device

changed 1-27-97 by Bob O'Neil

Cable 33

HPU3 Cabinet B

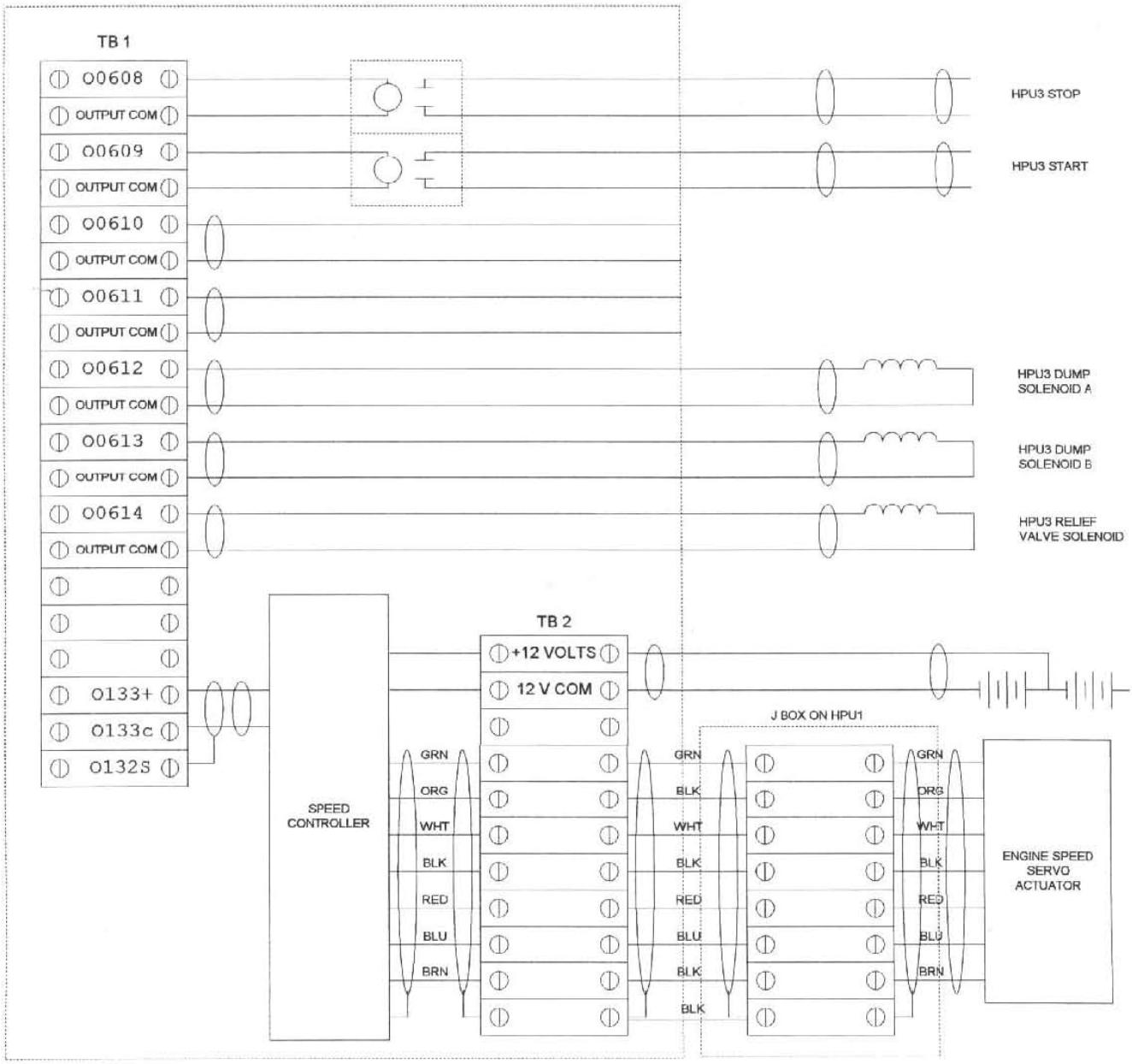

HPU3 box B
cables to device

changed 1-27-97 by Bob O'Neil

Cable 33

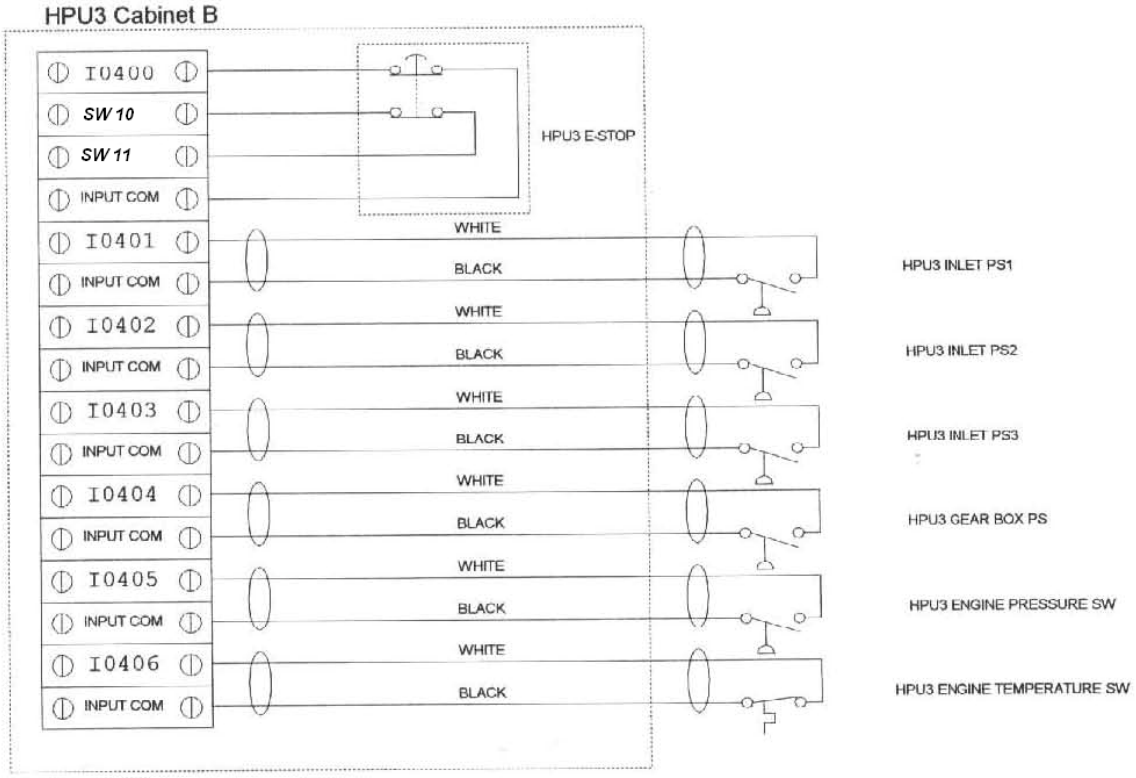

from BOX F

Cable 34

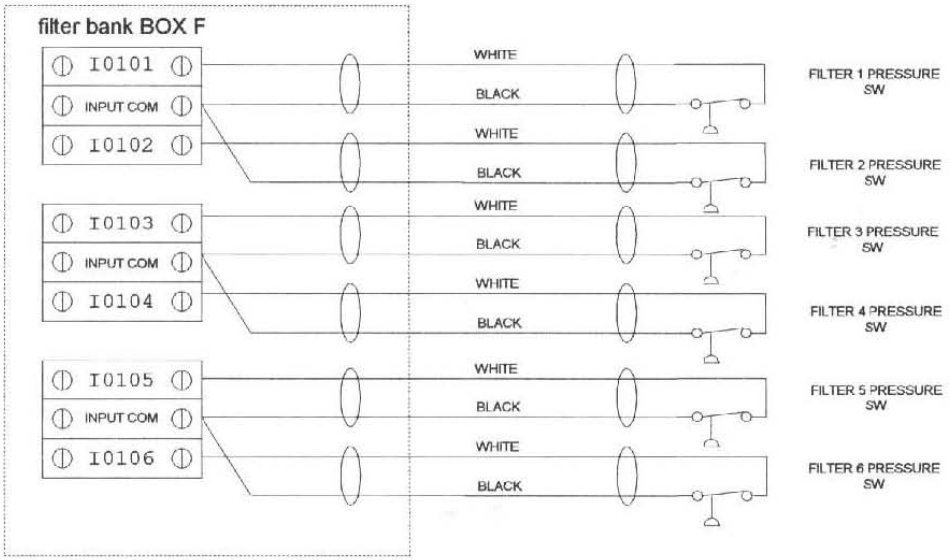

super charge pump

Cable 35

super charge pump BOX G

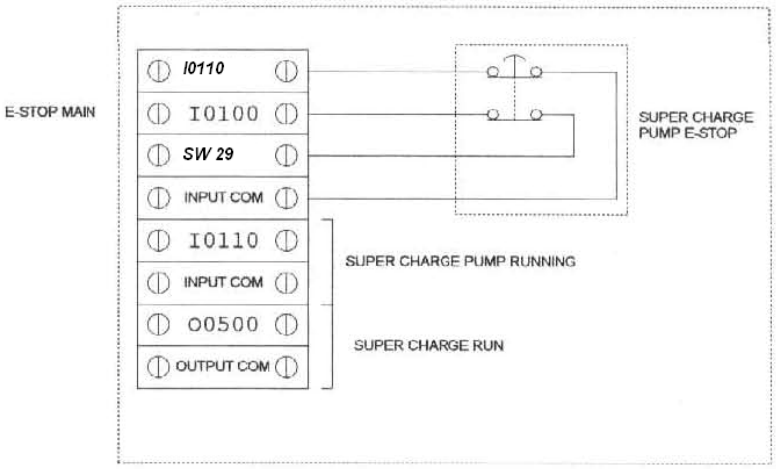

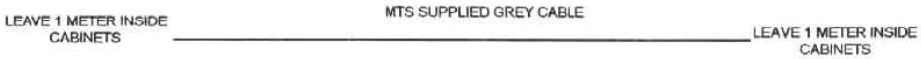

hyd res

Cable 36

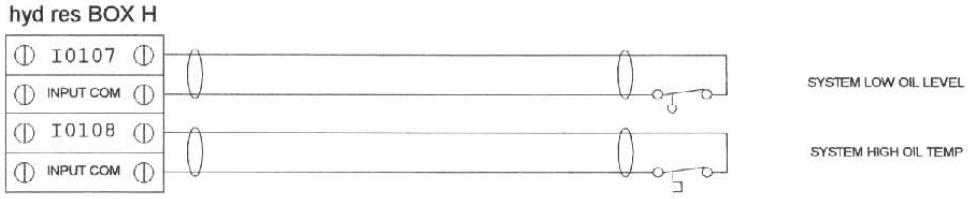

fuel tank

Cable 37

fuel tank BOX I

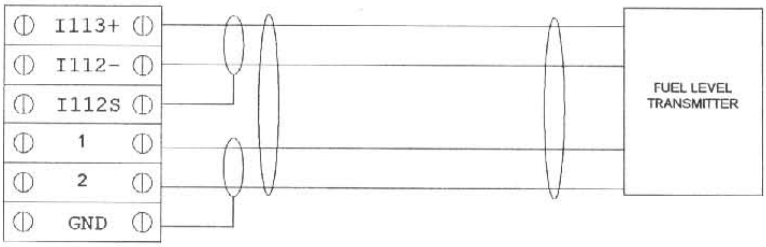

Wago Addressing for Main PLC

WIRE#	Description	Slot	Module	Type	Node	Address	PWR
I100	SS Pressure A	1	750-477	AI- 0-10V	1,2	%IW0	
I101	SS Pressure B	1	750-477	AI- 0-10V	5,6	%IW1	
I102	SS Pressure C	2	750-477	AI- 0-10V	1,2	%IW2	
I103	SS Pressure D	2	750-477	AI- 0-10V	5,6	%IW3	
I110	System Pressure	3	750-477	AI- 0-10V	1,2	%IW4	
I111	System Temperature	3	750-477	AI- 0-10V	5,6	%IW5	
I112	Spare	4	750-477	AI- 0-10V	1,2	%IW6	
		4	750-477	AI- 0-10V	5,6	%IW7	
I120	Structural Pressure	5	750-477	AI- 0-10V	1,2	%IW8	
		5	750-477	AI- 0-10V	5,6	%IW9	
I113	Fuel Level	6	750-454	AI- 4-20mA	1,2	%IW10	
I121	Structural Temperature	6	750-454	AI- 4-20mA	5,6	%IW11	
		7	750-559	AO- 0-10V	1,2	%QW0	
O131	Diesel 1- Engine Speed Cmd	7	750-559	AO- 0-10V	5,6	%QW1	
O132	Diesel 2- Engine Speed Cmd	7	750-559	AO- 0-10V	3,4	%QW2	
O133	Diesel 3- Engine Speed Cmd	7	750-559	AO- 0-10V	7,8	%QW3	
O140	Pilot Pressure Cmd	8	750-559	AO- 0-10V	1,2	%QW4	
O141-O130	System Pressure Cmd	8	750-559	AO- 0-10V	5,6	%QW5	
O142	Cooling System Cmd	8	750-559	AO- 0-10V	3,4	%QW6	
O143	HPS 4 Press Cmd	8	750-559	AO- 0-10V	7,8	%QW7	
O150		9	750-559	AO- 0-10V	3,4	%QW10	
O151		9	750-559	AO- 0-10V	7,8	%QW11	
O152		9	750-559	AO- 0-10V	1,2	%QW8	
O153		9	750-559	AO- 0-10V	5,6	%QW9	
	Power Supply Ok	10	750-610	DI		%IW12.00	
	Fuse Fault	10	750-610	DI		%IW12.01	
I0100		11	750-431	DI - Sink	1	%IW12.02	
I0101	Filter PS 1	11	750-431	DI - Sink	5	%IW12.03	
I0102	Filter PS 2	11	750-431	DI - Sink	2	%IW12.04	
I0103	Filter PS 3	11	750-431	DI - Sink	6	%IW12.05	
I0104	Filter PS 4	11	750-431	DI - Sink	3	%IW12.06	
I0105	Filter PS 5	11	750-431	DI - Sink	7	%IW12.07	
I0106	Filter PS 6	11	750-431	DI - Sink	4	%IW12.08	
I0107	Oil Level Low	11	750-431	DI - Sink	8	%IW12.09	
I0108	Oil Temp High	12	750-431	DI - Sink	1	%IW12.10	
I0109	SC Running	12	750-431	DI - Sink	5	%IW12.11	
I0110	Estop SC	12	750-431	DI - Sink	2	%IW12.12	
I0111	SC Spare	12	750-431	DI - Sink	6	%IW12.13	
		12	750-431	DI - Sink	3	%IW12.14	
		12	750-431	DI - Sink	7	%IW12.15	
I0114	Suspension - Low Pressure Limit B	12	750-431	DI - Sink	4	%IW13.00	

I0115	Suspension - Low Pressure Limit C	12	750-431	DI - Sink	8	%IW13.01
I0200	Estop Diesel 1	13	750-431	DI - Sink	1	%IW13.02
I0201	Diesel 1- Inlet PS 1	13	750-431	DI - Sink	5	%IW13.03
I0202	Diesel 1- Inlet PS 2	13	750-431	DI - Sink	2	%IW13.04
I0203	Diesel 1- Inlet PS 3	13	750-431	DI - Sink	6	%IW13.05
I0204	Diesel 1- Gear Box PS	13	750-431	DI - Sink	3	%IW13.06
I0205	Diesel 1- Engine PS	13	750-431	DI - Sink	7	%IW13.07
I0206	Diesel 1- Engine Temp Switch	13	750-431	DI - Sink	4	%IW13.08
I0207	Diesel 1- Local Speed	13	750-431	DI - Sink	8	%IW13.09
I0208	Suspension - Low Pressure Limit A	14	750-431	DI - Sink	1	%IW13.10
I0209	Air Supply Pressure	14	750-431	DI - Sink	5	%IW13.11
I0210	Suspension - Upper Limit A	14	750-431	DI - Sink	2	%IW13.12
I0211	Suspension - Lower Limit A	14	750-431	DI - Sink	6	%IW13.13
I0212	Suspension - Upper Limit B	14	750-431	DI - Sink	3	%IW13.14
I0213	Suspension - Lower Limit B	14	750-431	DI - Sink	7	%IW13.15
I0214	Suspension - Upper Limit C	14	750-431	DI - Sink	4	%IW14.00
I0215	Suspension - Lower Limit C	14	750-431	DI - Sink	8	%IW14.01
I0300	Estop Diesel 2	15	750-431	DI - Sink	1	%IW14.02
I0301	Diesel 2- Inlet PS 1	15	750-431	DI - Sink	5	%IW14.03
I0302	Diesel 2- Inlet PS 2	15	750-431	DI - Sink	2	%IW14.04
I0303	Diesel 2- Inlet PS 3	15	750-431	DI - Sink	6	%IW14.05
I0304	Diesel 2- Gear Box PS	15	750-431	DI - Sink	3	%IW14.06
I0305	Diesel 2- Engine PS	15	750-431	DI - Sink	7	%IW14.07
I0306	Diesel 2- Engine Temp Switch	15	750-431	DI - Sink	4	%IW14.08
I0307	Diesel 2- Local Speed	15	750-431	DI - Sink	8	%IW14.09
I0308	Estop Tunnel	16	750-431	DI - Sink	1	%IW14.10
I0309	Estop Pit	16	750-431	DI - Sink	5	%IW14.11
I0310	Pilot Filter	16	750-431	DI - Sink	2	%IW14.12
I0311	Pilot Pressure	16	750-431	DI - Sink	6	%IW14.13
I0312	Sump Pump Power	16	750-431	DI - Sink	3	%IW14.14
I0313	Sump Pump Over Level	16	750-431	DI - Sink	7	%IW14.15
I0314	Sump Pump Filter Warning (35 PSI)	16	750-431	DI - Sink	4	%IW15.00
I0315	Sump Pump Filter Limit (70 PSI)	16	750-431	DI - Sink	8	%IW15.01
I0400	Estop Diesel 3	17	750-431	DI - Sink	1	%IW15.02
I0401	Diesel 3- Inlet PS 1	17	750-431	DI - Sink	5	%IW15.03
I0402	Diesel 3- Inlet PS 2	17	750-431	DI - Sink	2	%IW15.04
I0403	Diesel 3- Inlet PS 3	17	750-431	DI - Sink	6	%IW15.05
I0404	Diesel 3- Gear Box PS	17	750-431	DI - Sink	3	%IW15.06
I0405	Diesel 3- Engine PS	17	750-431	DI - Sink	7	%IW15.07
I0406	Diesel 3- Engine Temp Switch	17	750-431	DI - Sink	4	%IW15.08
I0407	Diesel 3- Local Speed	17	750-431	DI - Sink	8	%IW15.09
I0408	Estop - Flexible Link	18	750-431	DI - Sink	1	%IW15.10
I0409	Main Estop Ind	18	750-431	DI - Sink	5	%IW15.11
I0410	Ball Valve 1 - HPS to Table	18	750-431	DI - Sink	2	%IW15.12
I0411	Ball Valve 2 - HPS system Connect	18	750-431	DI - Sink	6	%IW15.13
I0412	Ball Valve 3 - HPS to Structural	18	750-431	DI - Sink	3	%IW15.14

I0413	HPS 4 Inlet PS	18	750-431	DI - Sink	7	%IW15.15	
I0414		18	750-431	DI - Sink	4	%IW16.00	
I0415	Sump Pump Running	18	750-431	DI - Sink	8	%IW16.01	
WATCH	Watchdog- Loop Back	19	750-431	DI - Sink	1	%IW16.02	
ABORT	Abort Indicate	19	750-431	DI - Sink	5	%IW16.03	
ESTOP	Estop Indicate	19	750-431	DI - Sink	2	%IW16.04	
		19	750-431	DI - Sink	6	%IW16.05	
		19	750-431	DI - Sink	3	%IW16.06	
		19	750-431	DI - Sink	7	%IW16.07	
		19	750-431	DI - Sink	4	%IW16.08	
		19	750-431	DI - Sink	8	%IW16.09	
		20	750-431	DI - Sink	1	%IW16.10	
		20	750-431	DI - Sink	5	%IW16.11	
		20	750-431	DI - Sink	2	%IW16.12	
		20	750-431	DI - Sink	6	%IW16.13	
		20	750-431	DI - Sink	3	%IW16.14	
		20	750-431	DI - Sink	7	%IW16.15	
		20	750-431	DI - Sink	4	%IW17.00	
		20	750-431	DI - Sink	8	%IW17.01	
	Power Supply Ok	21	750-610	DI		%IW17.02	
	Fuse Fault	21	750-610	DI		%IW17.03	
O0500	SC Run	22	750-513	DO- Relay	1,2	%QW12.00	Estop
O0501	SC Spare	22	750-513	DO- Relay	5,6	%QW12.01	
O0502	SC Spare	23	750-513	DO- Relay	1,2	%QW12.02	
O0503	structReliefDO	23	750-513	DO- Relay	5,6	%QW12.03	
O0504	estopResetDO	24	750-513	DO- Relay	1,2	%QW12.04	
O0505	Spare	24	750-513	DO- Relay	5,6	%QW12.05	
O0506	Spare	25	750-513	DO- Relay	1,2	%QW12.06	
O0507	Spare	25	750-513	DO- Relay	5,6	%QW12.07	
O0508	Diesel 1- Stop	26	750-513	DO- Relay	1,2	%QW12.08	Abort
O0509	Diesel 1- Start	26	750-513	DO- Relay	5,6	%QW12.09	Abort
O0510	Diesel 1- Disengage Clutch (not used)	27	750-513	DO- Relay	1,2	%QW12.10	
O0511	Diesel 1- Engage Clutch (not used)	27	750-513	DO- Relay	5,6	%QW12.11	
O0512	Diesel 1- Dump 1 1250 PSI Relief	28	750-513	DO- Relay	1,2	%QW12.12	Abort
O0513	Diesel 1- Dump 2 3500 PSI Relief	28	750-513	DO- Relay	5,6	%QW12.13	Abort
O0514	Diesel 1- Relief Valve	29	750-513	DO- Relay	1,2	%QW12.14	Abort
O0515	Diesel 1- Speed control enable	29	750-513	DO- Relay	5,6	%QW12.15	Abort
O0600	Diesel 2- Stop	30	750-513	DO- Relay	1,2	%QW13.00	Abort
O0601	Diesel 2- Start	30	750-513	DO- Relay	5,6	%QW13.01	Abort
O0602	Diesel 2- Disengage Clutch	31	750-513	DO- Relay	1,2	%QW13.02	
O0603	Diesel 2- Engage Clutch	31	750-513	DO- Relay	5,6	%QW13.03	
O0604	Diesel 2- Dump 1	32	750-513	DO- Relay	1,2	%QW13.04	Abort
O0605	Diesel 2- Dump 2	32	750-513	DO- Relay	5,6	%QW13.05	Abort
O0606	Diesel 2- Relief Valve	33	750-513	DO- Relay	1,2	%QW13.06	Abort
O0607	Diesel 2- Speed control enable	33	750-513	DO- Relay	5,6	%QW13.07	Abort

O0608	Diesel 3- Stop	34	750-513	DO- Relay	1,2	%QW13.08	Abort
O0609	Diesel 3- Start	34	750-513	DO- Relay	5,6	%QW13.09	Abort
O0610		35	750-513	DO- Relay	1,2	%QW13.10	
O0611		35	750-513	DO- Relay	5,6	%QW13.11	
O0612	Diesel 3- Dump 1	36	750-513	DO- Relay	1,2	%QW13.12	Abort
O0613	Diesel 3- Dump 2	36	750-513	DO- Relay	5,6	%QW13.13	Abort
O0614	Diesel 3- Relief Valve	37	750-513	DO- Relay	1,2	%QW13.14	Abort
O0615	Diesel 3- Speed control enable	37	750-513	DO- Relay	5,6	%QW13.15	Abort
O0700	SS A Activate	38	750-513	DO- Relay	1,2	%QW14.00	
O0701	SS B Activate	38	750-513	DO- Relay	5,6	%QW14.01	
O0702	SS C Activate	39	750-513	DO- Relay	1,2	%QW14.02	
O0703	SS D Activate	39	750-513	DO- Relay	5,6	%QW14.03	
O0704	SS Increase	40	750-513	DO- Relay	1,2	%QW14.04	Abort
O0705	SS Decrease	40	750-513	DO- Relay	5,6	%QW14.05	
O0706	Spare	41	750-513	DO- Relay	1,2	%QW14.06	
O0707	Spare	41	750-513	DO- Relay	5,6	%QW14.07	
O0708	Pilot Connect	42	750-513	DO- Relay	1,2	%QW14.08	Abort
O0709	Spare	42	750-513	DO- Relay	5,6	%QW14.09	
O0710	Suspension - Raise A	43	750-513	DO- Relay	1,2	%QW14.10	
O0711	Suspension - Lower A	43	750-513	DO- Relay	5,6	%QW14.11	
O0712	Suspension - Raise B	44	750-513	DO- Relay	1,2	%QW14.12	
O0713	Suspension - Lower B	44	750-513	DO- Relay	5,6	%QW14.13	
O0714	Suspension - Raise C	45	750-513			%QW14.14	
O0715	Suspension - Lower C	45	750-513			%QW14.15	
	Power Supply Ok	46	750-610	DI		%IW17.04	
	Fuse Fault	46	750-610	DI		%IW17.05	
BRENTEK	Watchdog- Brentek	47	750-502	DO- Relay	1,2	%QW15.00	
WATCH	Watchdog- Loop Back	47	750-502	DO- Relay	5,6	%QW15.01	

Wago Addressing for Pilot HPU0 and Struct PLC

		Wago				
	Description	Slot	Module	Type	Node	Address
I0000	Spare	1	750-431	DI-24V	1	%IW0.0
I0001	Spare	1	750-431	DI-24V	5	%IW0.1
I0002	Start Button	1	750-431	DI-24V	2	%IW0.2
I0003	Stop Button	1	750-431	DI-24V	6	%IW0.3
I0004	High Switch	1	750-431	DI-24V	3	%IW0.4
I0005	Local/Remote	1	750-431	DI-24V	7	%IW0.5
I0006	Pump 1 Select	1	750-431	DI-24V	4	%IW0.6
I0007	Pump 2 Select	1	750-431	DI-24V	8	%IW0.7
I0008	Reset	2	750-431	DI-24V	1	%IW0.8
I0009	Estop Status	2	750-431	DI-24V	5	%IW0.9
I0010	Supercharge Start	2	750-431	DI-24V	2	%IW0.10
I0011	Supercharge Only	2	750-431	DI-24V	6	%IW0.11
I0012	Motor Overload	2	750-431	DI-24V	3	%IW0.12
I0013	Supercharge Motor Status	2	750-431	DI-24V	7	%IW0.13
I0014	Main Motor 1 Status	2	750-431	DI-24V	4	%IW0.14
I0015	Main Motor 2 Status	2	750-431	DI-24V	8	%IW0.15
I0016		3	750-431	DI-24V	1	%IW1.0
I0017	Low Level Warning Switch	3	750-431	DI-24V	5	%IW1.1
I0018	High Level Warning Switch	3	750-431	DI-24V	2	%IW1.2
I0019	Inlet Pressure Switch 2	3	750-431	DI-24V	6	%IW1.3
I0020	Inlet Pressure Switch 1	3	750-431	DI-24V	3	%IW1.4
I0021	Filter Delta P SW	3	750-431	DI-24V	7	%IW1.5
I0022	Overtemp Switch	3	750-431	DI-24V	4	%IW1.6
I0023	Overtemp Warning Switch	3	750-431	DI-24V	8	%IW1.7
	Power Supply Ok	4	750-610			%IW1.8
	Fuse Fault	4	750-610			%IW1.9
O0000	Motor 1 Start	5	750-530	DO-24V	1	%QW0.0
O0001	Motor 1 Run	5	750-530	DO-24V	5	%QW0.1
O0002	Motor 2 Start	5	750-530	DO-24V	2	%QW0.2
O0003	Motor 2 Run	5	750-530	DO-24V	6	%QW0.3
O0008		5	750-530	DO-24V	3	%QW0.4
O0009		5	750-530	DO-24V	7	%QW0.5
		5	750-530	DO-24V	4	%QW0.6
		5	750-530	DO-24V	8	%QW0.7
O0004		6	750-502	DO-24V	1	%QW0.8
O0005	Connect Valve	6	750-502	DO-24V	5	%QW0.9
O0006	Main High Pressure	7	750-502	DO-24V	1	%QW0.10
O0007		7	750-502	DO-24V	5	%QW0.11
O0012	Low Level Indictor	8	750-513	DO-Relay	1,2	%QW0.12
O0013	Over Temp Indicator	8	750-513	DO-Relay	5,6	%QW0.13
O0014	Dirty Filter Indicator	9	750-513	DO-Relay	1,2	%QW0.14

O0015	Supercharge Indicator	9	750-513	DO-Relay	5,6	%QW0.15