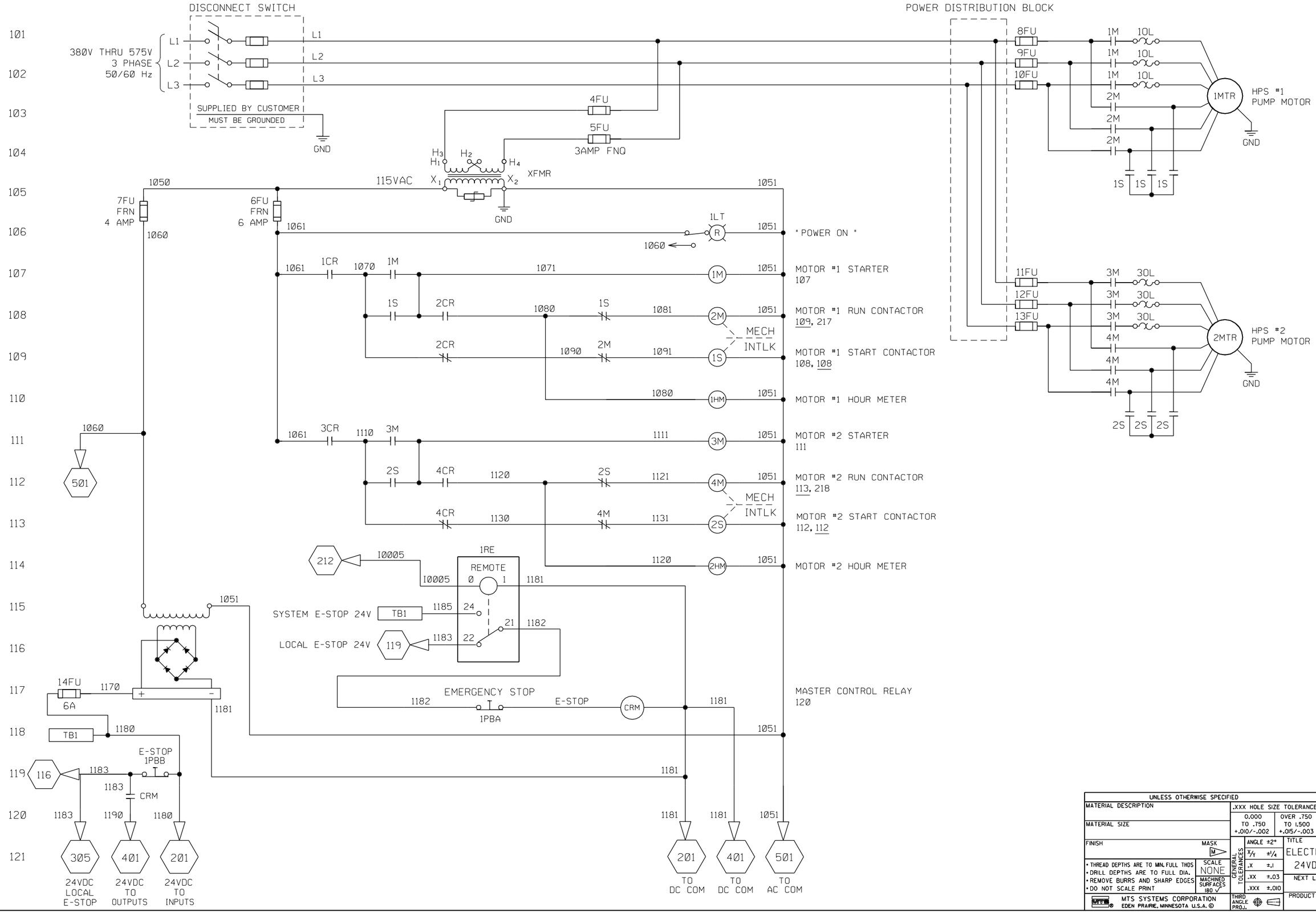

REVISIONS

DESCRIPTION	DFTSMN	APPVL	DATE	LETTER	ECO NO.
A) Replaced A.B. PLC with WAGO PLC B) Added Relay 1RE	DCJ	JAH	8-1-09	B	ECN 10-0006

SOURCE/REF. DRAWING:

PROPRIETARY DATA

The information and design(s) disclosed herein are the property of MTS Systems Corporation and may not be used, reproduced or disclosed in any form except as granted in writing by MTS Systems Corporation. This restriction excludes information that is in the public domain or was legitimately in the prior possession of the recipient.

UNLESS OTHERWISE SPECIFIED

MATERIAL DESCRIPTION

MATERIAL SIZE

FINISH

MASK

- THREAD DEPTHS ARE TO MIN. FULL THDS
- DRILL DEPTHS ARE TO FULL DIA.
- REMOVE BURRS AND SHARP EDGES
- DO NOT SCALE PRINT

SCALE NONE

MACHINED SURFACES 180 √

.XXX HOLE SIZE TOLERANCE: 0.000 TO .750 +.010/-.002; OVER .750 TO 1.500 +.015/-.003

GENERAL TOLERANCES: ANGLE ±2°; X/Y ±1/4; .X ±.1; .XX ±.03; .XXX ±.010

THIRD ANGLE PROJ.

MTS SYSTEMS CORPORATION
EDEN PRAIRIE, MINNESOTA U.S.A. ©

DRAWN	CHECK	ENGR	MFG
CN		BE	
DATE 1-29-96	DATE	DATE 2-96	DATE

TITLE: ELECTRICAL SCHEMATIC, HPS 24VDC, WYE-DELTA, A.B. PLC

NEXT LEVEL

PRODUCT CODE

SIZE: D

NUMBER: 517437-01

REV: B

SHEET 1 OF 5

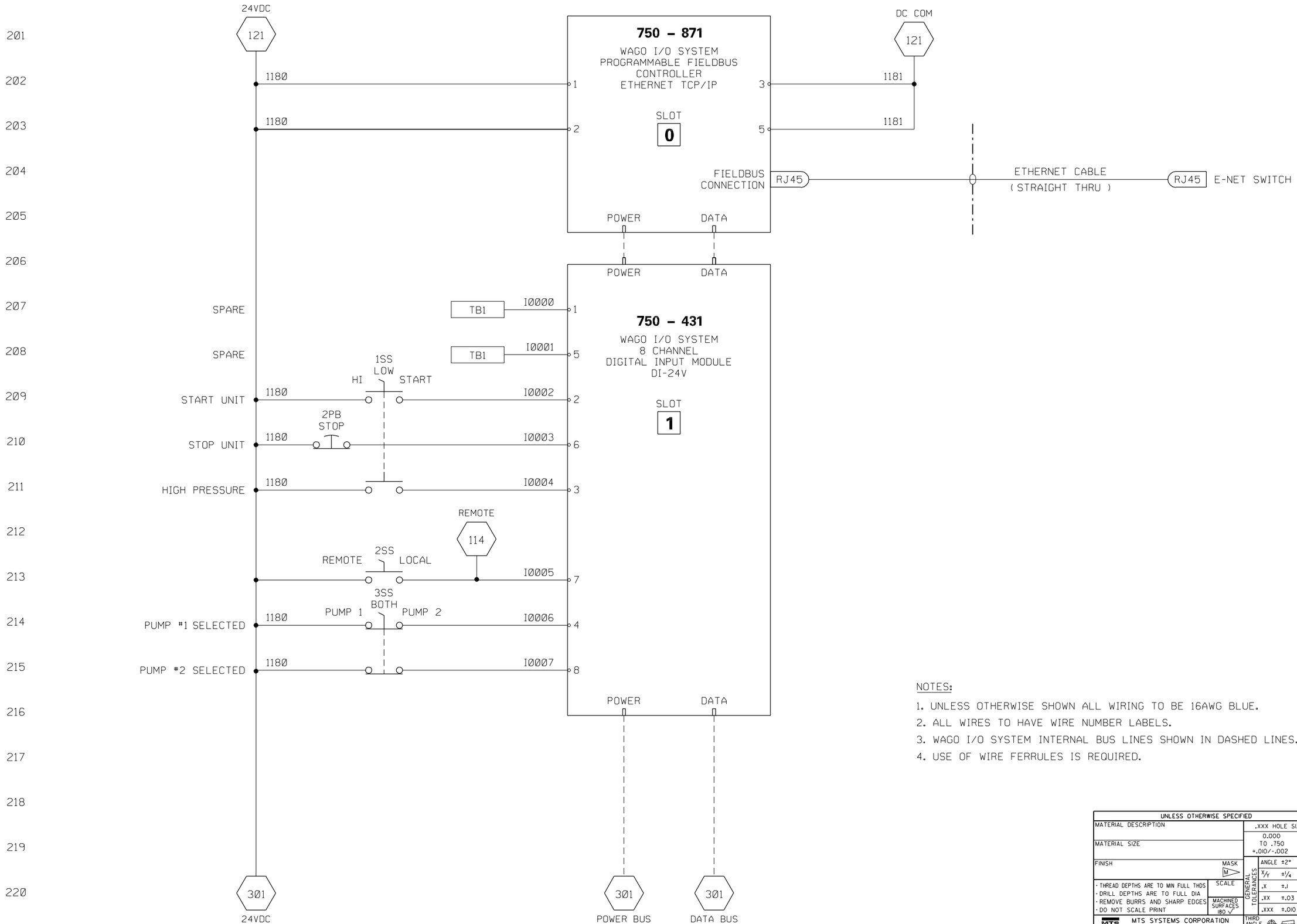

NOTES:

1. UNLESS OTHERWISE SHOWN ALL WIRING TO BE 16AWG BLUE.
2. ALL WIRES TO HAVE WIRE NUMBER LABELS.
3. WAGO I/O SYSTEM INTERNAL BUS LINES SHOWN IN DASHED LINES.
4. USE OF WIRE FERRULES IS REQUIRED.

REVISIONS				
DESCRIPTION			LETTER	ECN NO.
DRAWN	ENGR	DATE		

SOURCE/REF DRAWING:

PROPRIETARY DATA

The information and design(s) disclosed herein are the property of MTS Systems Corporation and may not be used, reproduced or disclosed in any form except as granted in writing by MTS Systems Corporation. This restriction excludes information that is in the public domain or was legitimately in the prior possession of the recipient.

UNLESS OTHERWISE SPECIFIED

MATERIAL DESCRIPTION

MATERIAL SIZE

FINISH — MASK M

· THREAD DEPTHS ARE TO MIN FULL THDS
· DRILL DEPTHS ARE TO FULL DIA
· REMOVE BURRS AND SHARP EDGES
· DO NOT SCALE PRINT

SCALE

MACHINED SURFACES 180 √

.XXX HOLE SIZE TOLERANCE: 0.000 TO .750 +.010/-.002; OVER .750 TO 1.500 +.015/-.003

GENERAL TOLERANCES: ANGLE ±2°; X/Y ±1/4; .X ±.1; .XX ±.03; .XXX ±.010

THIRD ANGLE PROJ.

MTS SYSTEMS CORPORATION
EDEN PRAIRIE, MINNESOTA U.S.A. ©

DRAWN	CHECK	ENGR	MFG
CN		BE	
DATE 1-29-96	DATE	DATE 2-96	DATE

TITLE
ELECTRICAL SCHEMATIC, HPS
24VDC, WYE-DELTA A.B.PLC

NEXT LEVEL

PRODUCT CODE

SIZE	NUMBER	REV
D	517437-01	B

SHEET 2 OF 5

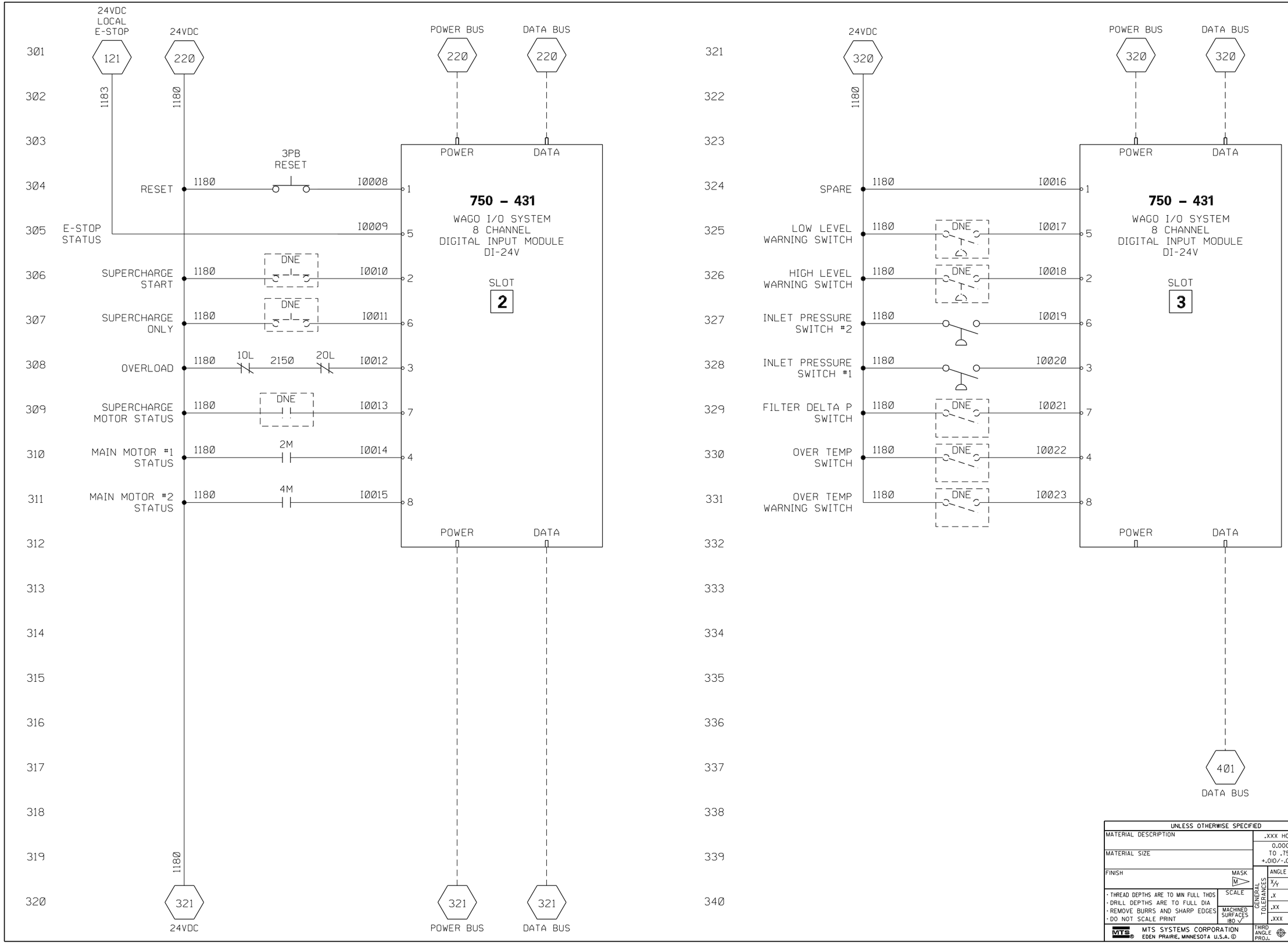

REVISIONS				
DESCRIPTION			LETTER	ECN NO.
DRAWN	ENGR	DATE		

SOURCE/REF DRAWING:

PROPRIETARY DATA

The information and design(s) disclosed herein are the property of MTS Systems Corporation and may not be used, reproduced or disclosed in any form except as granted in writing by MTS Systems Corporation. This restriction excludes information that is in the public domain or was legitimately in the prior possession of the recipient.

UNLESS OTHERWISE SPECIFIED

MATERIAL DESCRIPTION

MATERIAL SIZE

FINISH — MASK M

SCALE

- THREAD DEPTHS ARE TO MIN FULL THDS
- DRILL DEPTHS ARE TO FULL DIA
- REMOVE BURRS AND SHARP EDGES
- DO NOT SCALE PRINT

MACHINED SURFACES 180 √

GENERAL TOLERANCES: ANGLE ±2°; X/Y ±1/4; .X ±.1; .XX ±.03; .XXX ±.010

THIRD ANGLE PROJ.

.XXX HOLE SIZE TOLERANCE: 0.000 TO .750 +.010/-.002; OVER .750 TO 1.500 +.015/-.003

DRAWN	CHECK	ENGR	MFG
CN		BE	
DATE 1-29-96	DATE	DATE 2-96	DATE

TITLE: ELECTRICAL SCHEMATIC, HPS 24VDC, WYE-DELTA A.B.PLC

NEXT LEVEL

PRODUCT CODE

SIZE: D

NUMBER: 517437-01

REV: B

SHEET 3 OF 5

MTS SYSTEMS CORPORATION
EDEN PRAIRIE, MINNESOTA U.S.A.

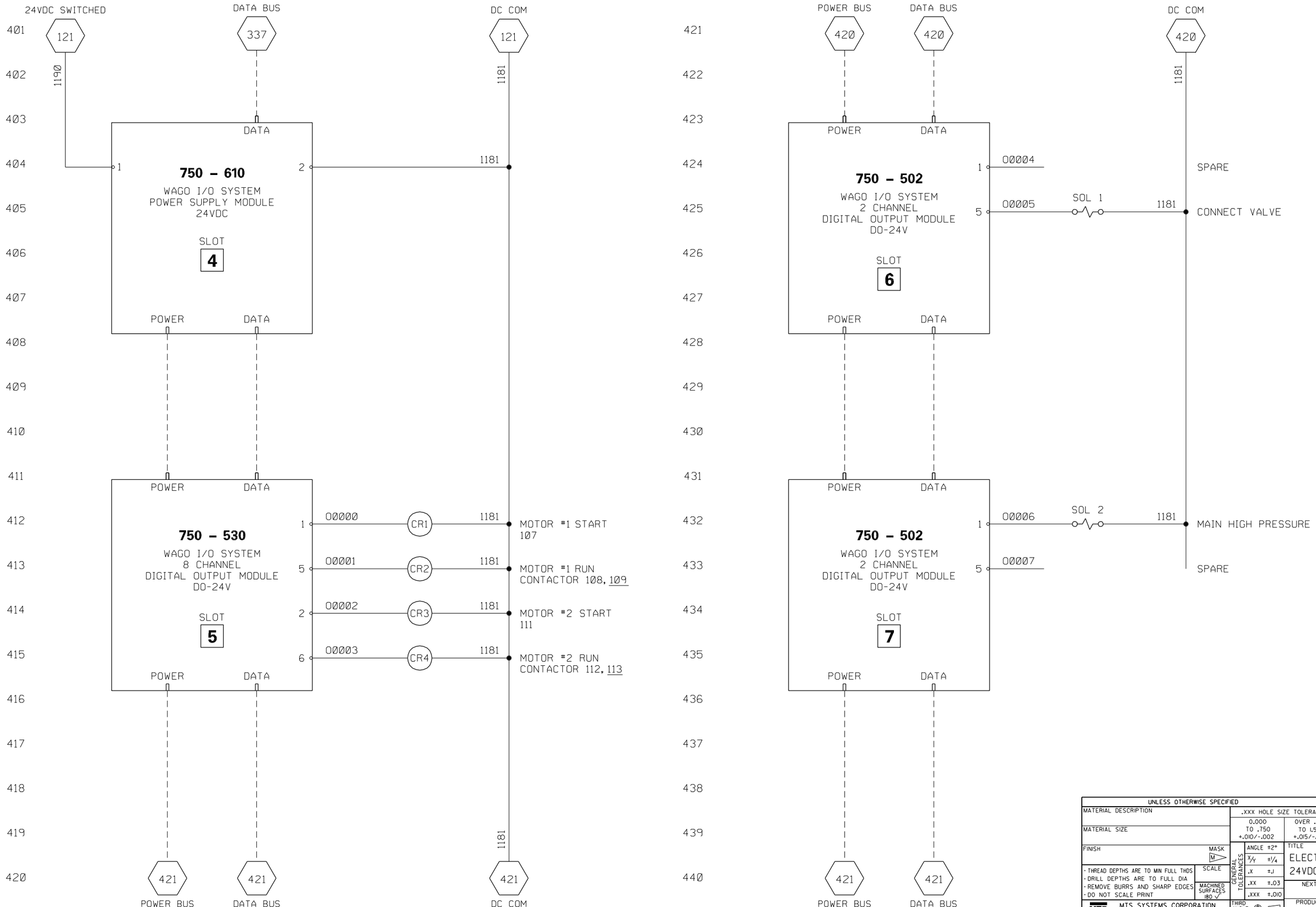

REVISIONS				
DESCRIPTION			LETTER	ECN NO.
DRAWN	ENGR	DATE		

SOURCE/REF DRAWING:

PROPRIETARY DATA

The information and design(s) disclosed herein are the property of MTS Systems Corporation and may not be used, reproduced or disclosed in any form except as granted in writing by MTS Systems Corporation. This restriction excludes information that is in the public domain or was legitimately in the prior possession of the recipient.

UNLESS OTHERWISE SPECIFIED

MATERIAL DESCRIPTION

MATERIAL SIZE

FINISH — MASK M

· THREAD DEPTHS ARE TO MIN FULL THDS
· DRILL DEPTHS ARE TO FULL DIA
· REMOVE BURRS AND SHARP EDGES
· DO NOT SCALE PRINT

SCALE

MACHINED SURFACES 180 √

.XXX HOLE SIZE TOLERANCE: 0.000 TO .750 +.010/-.002; OVER .750 TO 1.500 +.015/-.003

GENERAL TOLERANCES: ANGLE ±2°; X/Y ±1/4; .X ±.1; .XX ±.03; .XXX ±.010

THIRD ANGLE PROJ.

MTS SYSTEMS CORPORATION
EDEN PRAIRIE, MINNESOTA U.S.A.

DRAWN	CHECK	ENGR	MFG
CN		BE	
DATE 1-29-96	DATE	DATE 2-96	DATE

TITLE
ELECTRICAL SCHEMATIC, HPS
24VDC, WYE-DELTA A.B.PLC

NEXT LEVEL

PRODUCT CODE

SIZE	NUMBER	REV
D	517437-01	B

SHEET 4 OF 5

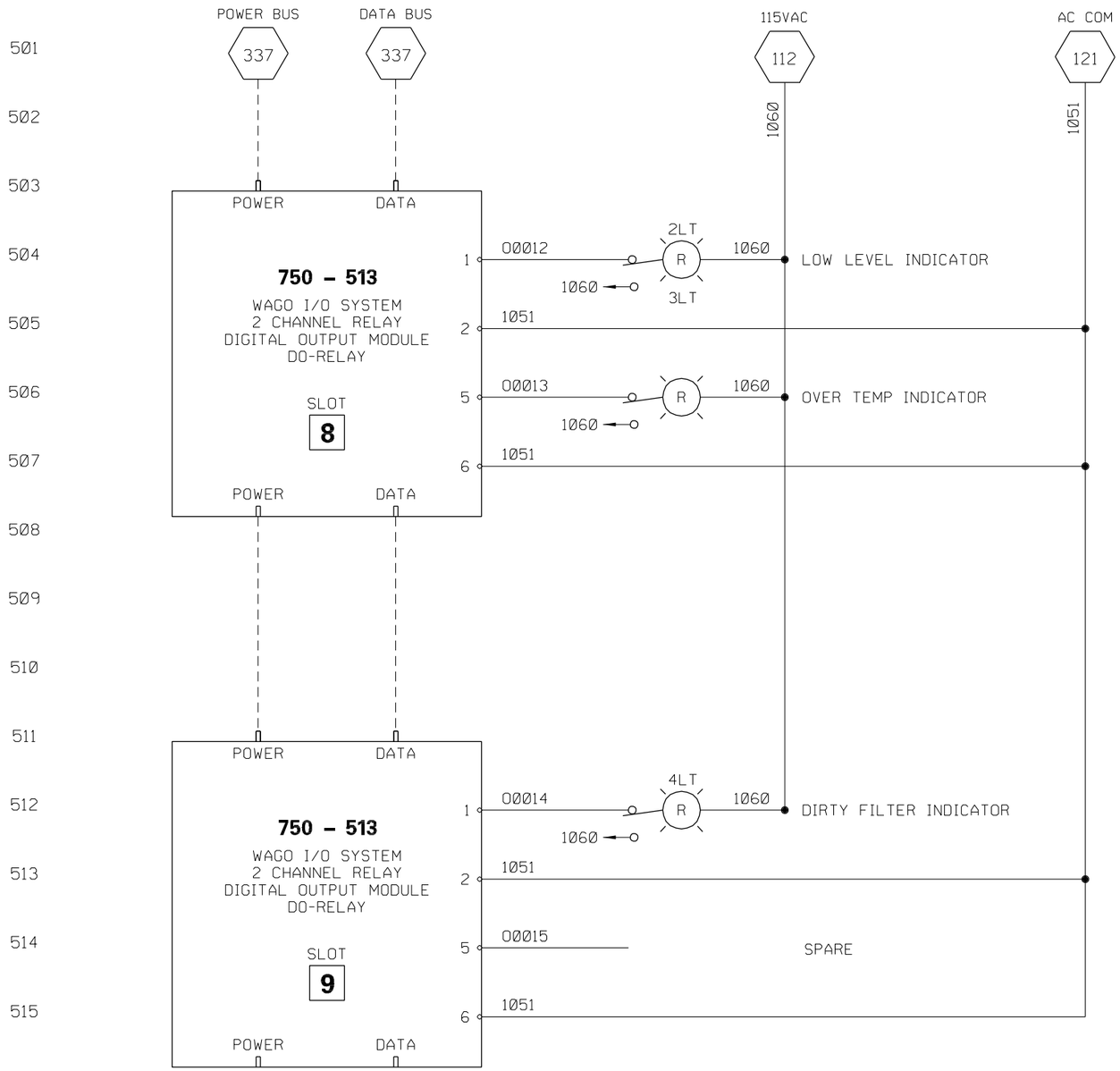

REVISIONS

DESCRIPTION			LETTER	ECN NO.
DRAWN	ENGR	DATE		

SOURCE/REF DRAWING:

PROPRIETARY DATA

The information and design(s) disclosed herein are the property of MTS Systems Corporation and may not be used, reproduced or disclosed in any form except as granted in writing by MTS Systems Corporation. This restriction excludes information that is in the public domain or was legitimately in the prior possession of the recipient.

UNLESS OTHERWISE SPECIFIED

MATERIAL DESCRIPTION

MATERIAL SIZE

FINISH — MASK M

SCALE

· THREAD DEPTHS ARE TO MIN FULL THDS
· DRILL DEPTHS ARE TO FULL DIA
· REMOVE BURRS AND SHARP EDGES
· DO NOT SCALE PRINT

MACHINED SURFACES 180 ✓

.XXX HOLE SIZE TOLERANCE: 0.000 TO .750 +.010/-.002; OVER .750 TO 1.500 +.015/-.003

GENERAL TOLERANCES: ANGLE ±2°; X/Y ±1/4; .X ±.1; .XX ±.03; .XXX ±.010

THIRD ANGLE PROJ.

DRAWN	CHECK	ENGR	MFG
CN		BE	
DATE 1-29-96	DATE	DATE 2-96	DATE

TITLE: ELECTRICAL SCHEMATIC, HPS 24VDC, WYE-DELTA A.B.PLC

NEXT LEVEL

PRODUCT CODE

SIZE: D

NUMBER: 517437-01

REV: B

SHEET 5 OF 5

MTS SYSTEMS CORPORATION
EDEN PRAIRIE, MINNESOTA U.S.A.