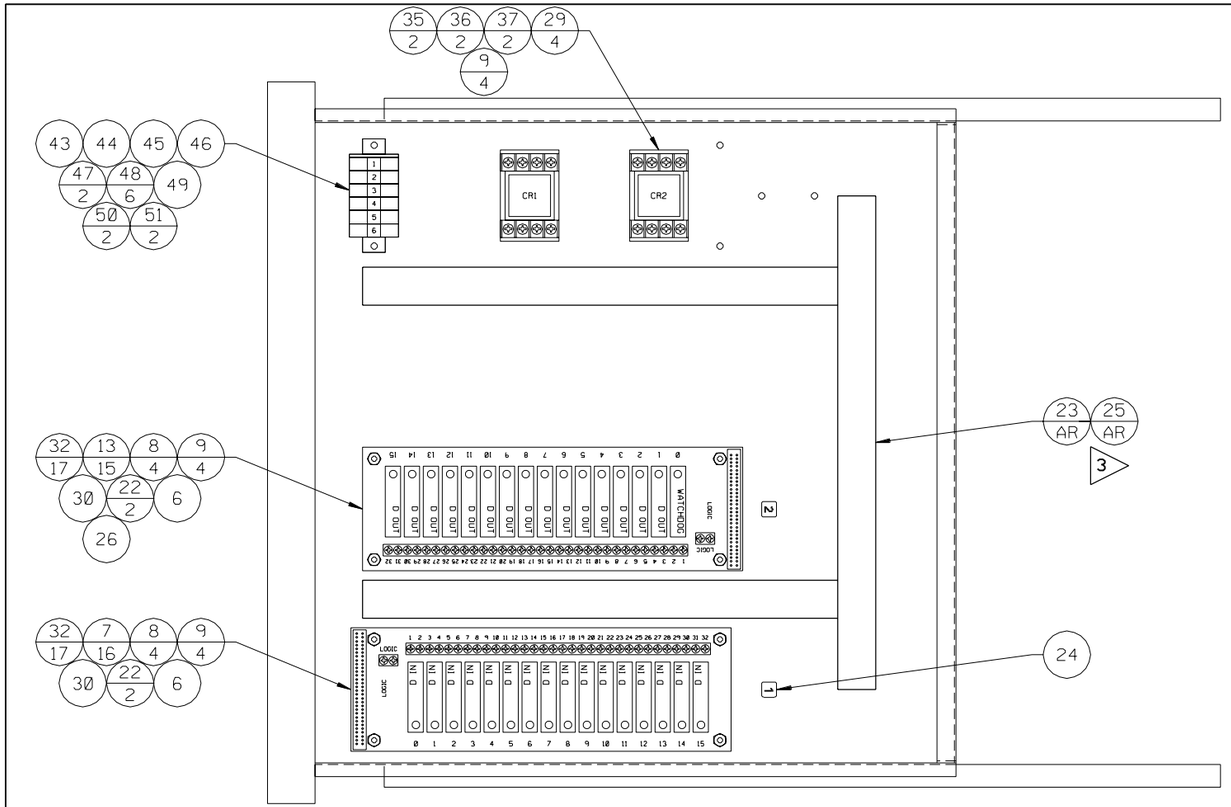

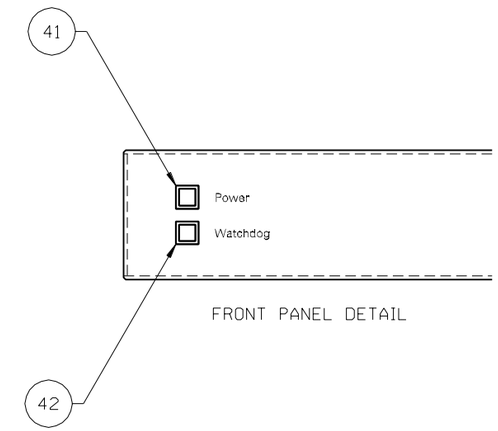

FRONT PANEL DETAIL

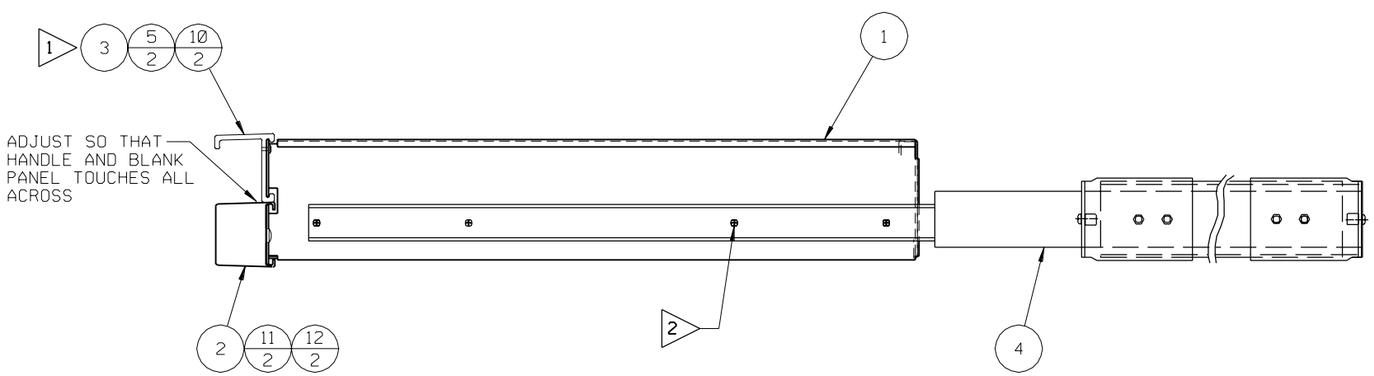

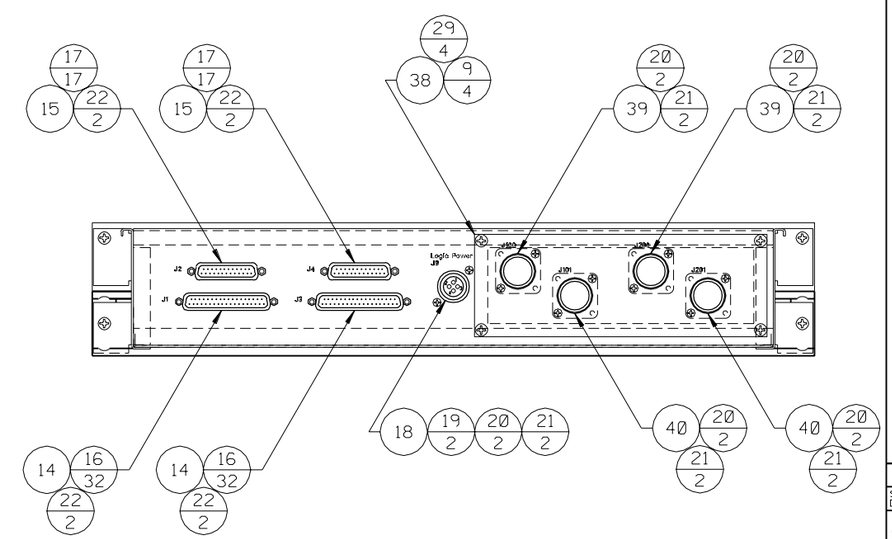

NOTES:

1. CENTER HANDLE, EQUALLY SPACED ON DRAWER ASSY.
2. USE LOCKTITE ON SLIDE MOUNTING SCREWS.
3. USE PRESSURE-SENSITIVE ADHESIVE MOUNTING TAPE, APPLIED, FOR MOUNTING PANDUCT. INSTALL IN APPROXIMATE AREA SHOWN.

REVISIONS

DESCRIPTION			LETTER	ECN NO.
DRAWN	ENGR	DATE		

SOURCE/REF DRAWING: 100030363,B

PROPRIETARY DATA

The information and design(s) disclosed herein are the property of MTS Systems Corporation and may not be used, reproduced or disclosed in any form except as granted in writing by MTS Systems Corporation. This restriction excludes information that is in the public domain or was legitimately in the prior possession of the recipient.

UNLESS OTHERWISE SPECIFIED

MATERIAL DESCRIPTION

MATERIAL SIZE

FINISH — MASK M

- THREAD DEPTHS ARE TO MIN FULL THDS
- DRILL DEPTHS ARE TO FULL DIA
- REMOVE BURRS AND SHARP EDGES
- DO NOT SCALE PRINT

SCALE NONE

MACHINED SURFACES 180 √

.XXX HOLE SIZE TOLERANCE: 0.000 TO .750 +.010/-.002; OVER .750 TO 1.500 +.015/-.003

GENERAL TOLERANCES: ANGLE ±2°; X/Y ±1/4; .X ±.1; .XX ±.03; .XXX ±.010

THIRD ANGLE PROJ.

DRAWN	CHECK	ENGR	MFG
TEM	TEM	RLL	
DATE 9-8-00	DATE 9-13-00	DATE 9-13-00	DATE

TITLE: ASSY- 16 CH DIGITAL I/O DRAWER

NEXT LEVEL

PRODUCT CODE

SIZE D

NUMBER 100-044-385 REV A

SHEET 1 OF 1

MTS SYSTEMS CORPORATION
EDEN PRAIRIE, MINNESOTA U.S.A.