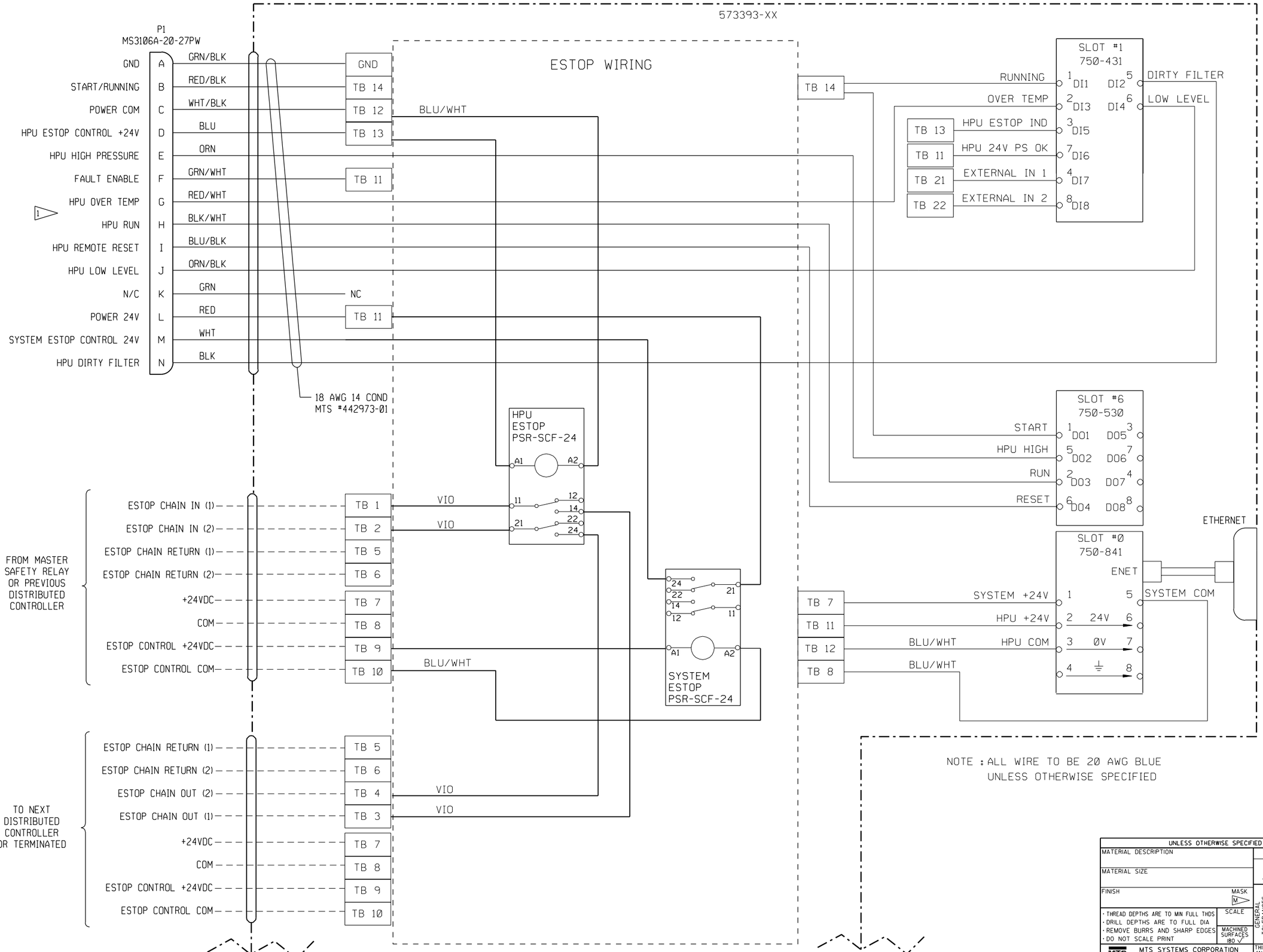

NOTE : ALL WIRE TO BE 20 AWG BLUE
UNLESS OTHERWISE SPECIFIED

REVISIONS				
DESCRIPTION			LETTER	ECN NO.
DRAWN	ENGR	DATE		

SOURCE/REF DRAWING:

PROPRIETARY DATA
The information and design(s) disclosed herein are the property of MTS Systems Corporation and may not be used, reproduced or disclosed in any form except as granted in writing by MTS Systems Corporation. This restriction excludes information that is in the public domain or was legitimately in the prior possession of the recipient.

UNLESS OTHERWISE SPECIFIED

MATERIAL DESCRIPTION
MATERIAL SIZE
FINISH — MASK M
· THREAD DEPTHS ARE TO MIN FULL THDS
· DRILL DEPTHS ARE TO FULL DIA
· REMOVE BURRS AND SHARP EDGES
· DO NOT SCALE PRINT
SCALE
MACHINED SURFACES 180 √

.XXX HOLE SIZE TOLERANCE: 0.000 TO .750 +.010/-.002; OVER .750 TO 1.500 +.015/-.003

GENERAL TOLERANCES: ANGLE ±2°; X/Y ±1/4; .X ±.1; .XX ±.03; .XXX ±.010

THIRD ANGLE PROJ.

MTS SYSTEMS CORPORATION
EDEN PRAIRIE, MINNESOTA U.S.A. ©

DRAWN	CHECK	ENGR	MFG
JAH		JAH	
DATE 4-08	DATE	DATE 4-08	DATE

TITLE
WIRING DIAGRAM-
REMOTE HPU CONTROLLER, PLC

NEXT LEVEL
PRODUCT CODE
SIZE D
NUMBER 700-004-316
REV A
SHEET 1 OF 3

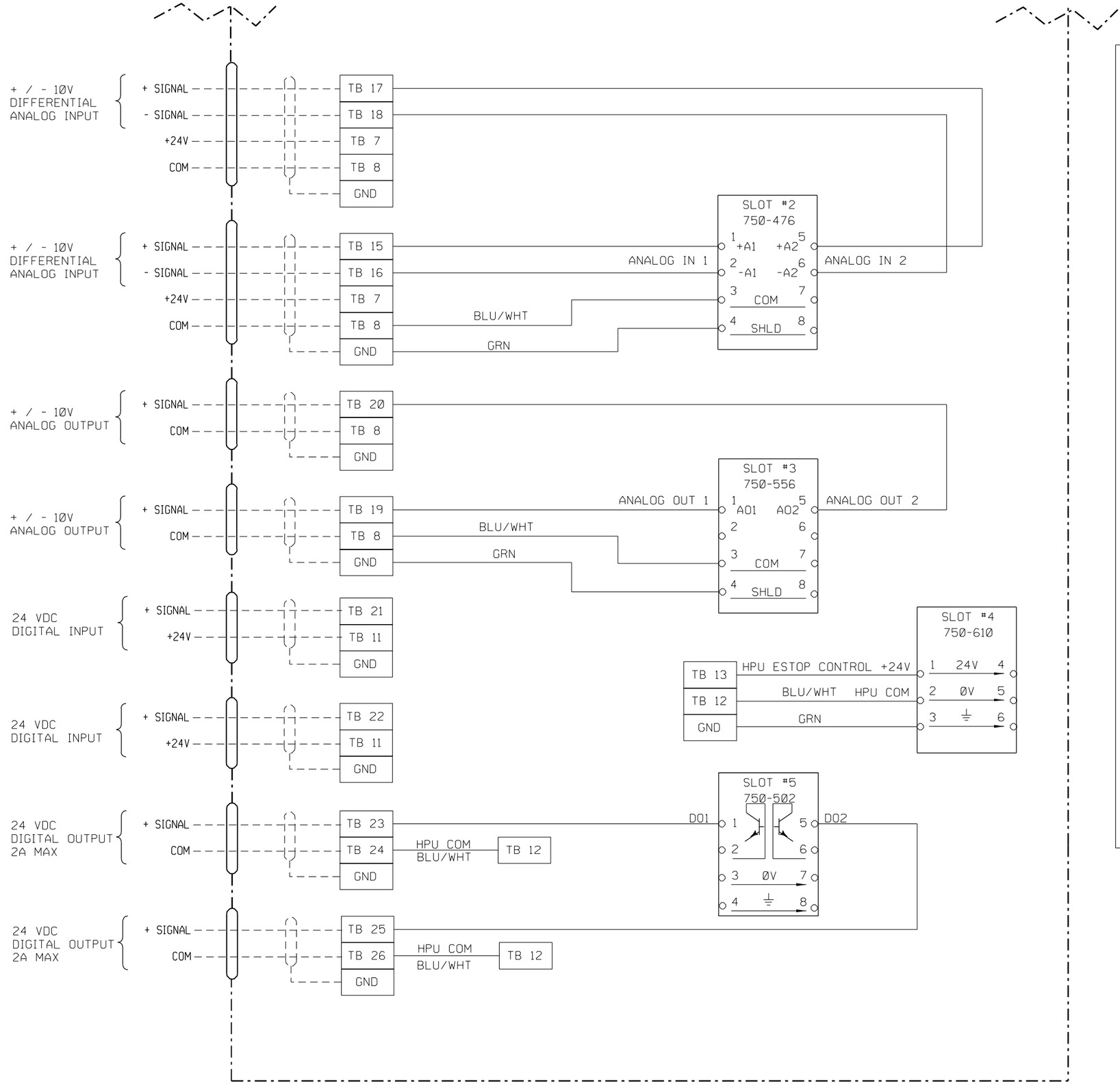

TERMINAL BLOCK KEY

TB 1	ESTOP CHAIN IN (1)
TB 2	ESTOP CHAIN IN (2)
TB 3	ESTOP CHAIN OUT (1)
TB 4	ESTOP CHAIN OUT (2)
TB 5	ESTOP CHAIN RETURN (1)
TB 6	ESTOP CHAIN RETURN (2)
TB 7	SYSTEM +24VDC
TB 8	SYSTEM COM
TB 9	SYSTEM ESTOP CONTROLLED +24VDC
TB 10	SYSTEM ESTOP COM
TB 11	HPU +24VDC
TB 12	HPU COM
TB 13	HPU ESTOP CONTROLLED +24VDC
TB 14	HPU START/RUNNING
TB 15	+AI1
TB 16	-AI1
TB 17	+AI2
TB 18	-AI2
TB 19	AO1
TB 20	AO2
TB 21	DI1 DIGITAL INPUT 1
TB 22	DI2 DIGITAL INPUT 2
TB 23	DO1 DIGITAL OUTPUT 1 (2 A MAX)
TB 24	=TB12 DIO1 COM JUMPERED DIODE TO TB23
TB 25	DO2 DIGITAL OUTPUT 2 (2 A MAX)
TB 26	=TB12 DIO2 COM JUMPERED DIODE TO TB25

REVISIONS

DESCRIPTION			LETTER	ECN NO.
DRAWN	ENGR	DATE		

SOURCE/REF DRAWING:

PROPRIETARY DATA

The information and design(s) disclosed herein are the property of MTS Systems Corporation and may not be used, reproduced or disclosed in any form except as granted in writing by MTS Systems Corporation. This restriction excludes information that is in the public domain or was legitimately in the prior possession of the recipient.

UNLESS OTHERWISE SPECIFIED

MATERIAL DESCRIPTION

MATERIAL SIZE

FINISH — MASK M

· THREAD DEPTHS ARE TO MIN FULL THDS
· DRILL DEPTHS ARE TO FULL DIA
· REMOVE BURRS AND SHARP EDGES
· DO NOT SCALE PRINT

SCALE

MACHINED SURFACES 180 √

.XXX HOLE SIZE TOLERANCE: 0.000 TO .750 +.010/-.002; OVER .750 TO 1.500 +.015/-.003

GENERAL TOLERANCES: ANGLE ±2°; X/Y ±1/4; .X ±.1; .XX ±.03; .XXX ±.010

THIRD ANGLE PROJ.

MTS SYSTEMS CORPORATION
EDEN PRAIRIE, MINNESOTA U.S.A. ©

DRAWN	CHECK	ENGR	MFG
JAH		JAH	
DATE 4-08	DATE	DATE 4-08	DATE

TITLE
WIRING DIAGRAM-
REMOTE HPU CONTROLLER, PLC

NEXT LEVEL

PRODUCT CODE

SIZE D

NUMBER 700-004-316

REV A

SHEET 2 OF 3

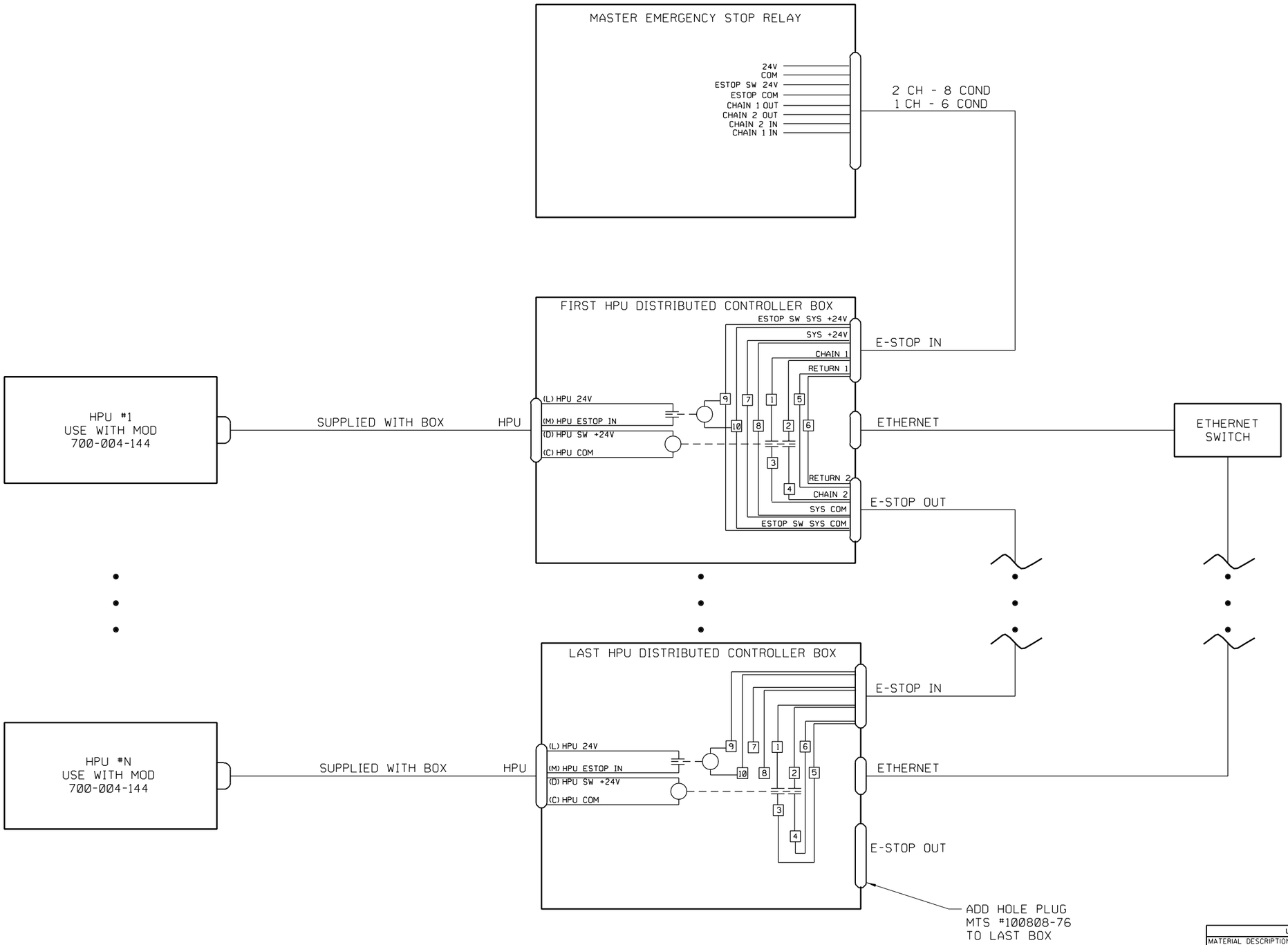

THIS SHEET IS FOR INSTALLATION HOOKUP REFERENCE ONLY

REVISIONS				
DESCRIPTION			LETTER	ECN NO.
DRAWN	ENGR	DATE		

SOURCE/REF DRAWING:

PROPRIETARY DATA

The information and design(s) disclosed herein are the property of MTS Systems Corporation and may not be used, reproduced or disclosed in any form except as granted in writing by MTS Systems Corporation. This restriction excludes information that is in the public domain or was legitimately in the prior possession of the recipient.

UNLESS OTHERWISE SPECIFIED

MATERIAL DESCRIPTION

MATERIAL SIZE

FINISH

MASK

SCALE

- THREAD DEPTHS ARE TO MIN FULL THDS
- DRILL DEPTHS ARE TO FULL DIA
- REMOVE BURRS AND SHARP EDGES
- DO NOT SCALE PRINT

MACHINED SURFACES 180 √

.XXX HOLE SIZE TOLERANCE: 0.000 TO .750 +.010/-.002; OVER .750 TO 1.500 +.015/-.003

GENERAL TOLERANCES: ANGLE ±2°; 3/4 ±1/4; .X ±.1; .XX ±.03; .XXX ±.010

THIRD ANGLE PROJ.

DRAWN	CHECK	ENGR	MFG
JAH		JAH	
DATE 4-08	DATE	DATE 4-08	DATE

TITLE: WIRING DIAGRAM- REMOTE HPU CONTROLLER, PLC

NEXT LEVEL

PRODUCT CODE

SIZE: D

NUMBER: 700-004-316

REV: A

SHEET 3 OF 3

MTS SYSTEMS CORPORATION
EDEN PRAIRIE, MINNESOTA U.S.A. ©