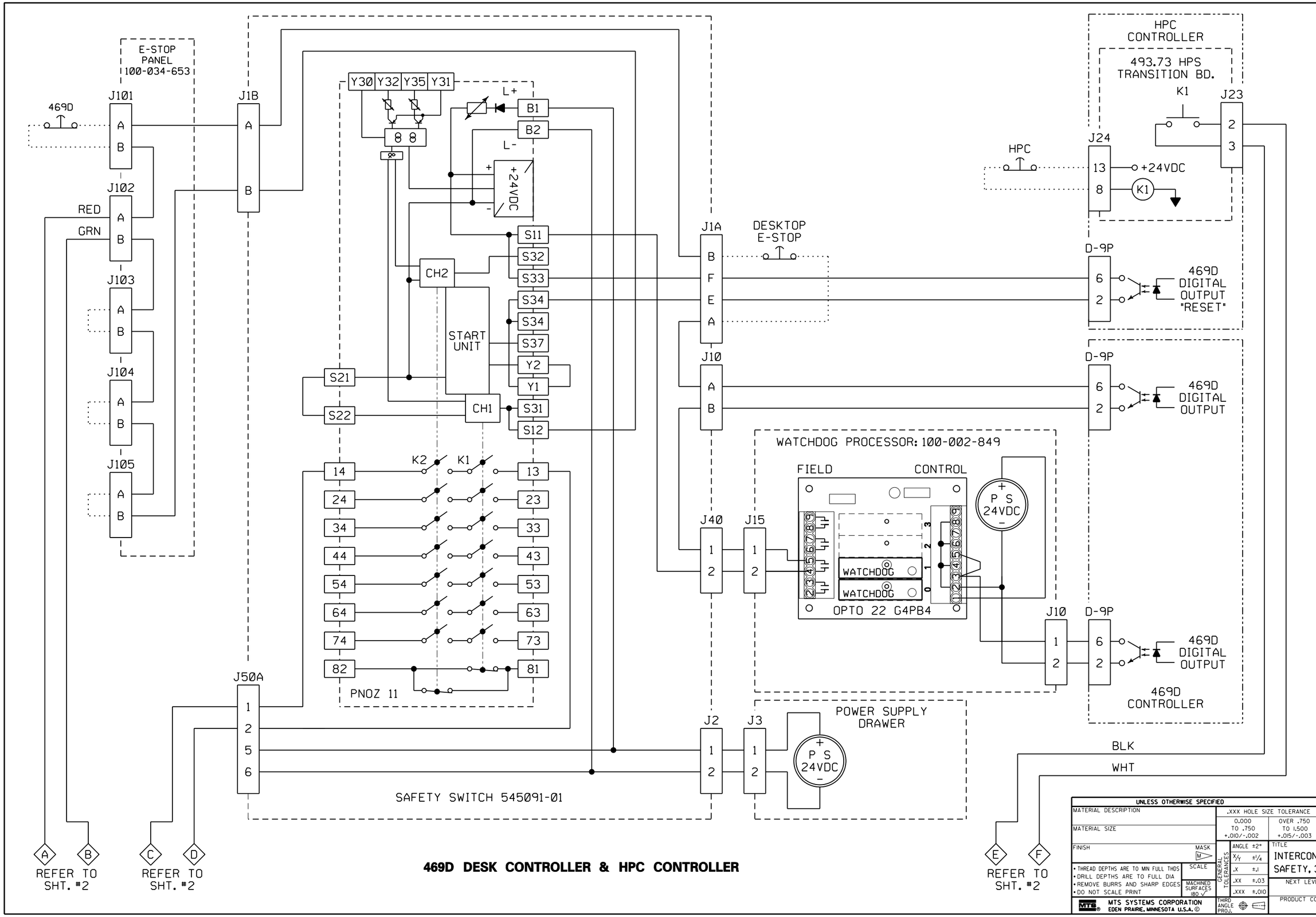

469D DESK CONTROLLER & HPC CONTROLLER

REVISIONS

DESCRIPTION			LETTER	ECN NO.
DRAWN	ENGR	DATE		

SOURCE/REF DRAWING:

PROPRIETARY DATA

The information and design(s) disclosed herein are the property of MTS Systems Corporation and may not be used, reproduced or disclosed in any form except as granted in writing by MTS Systems Corporation. This restriction excludes information that is in the public domain or was legitimately in the prior possession of the recipient.

UNLESS OTHERWISE SPECIFIED

MATERIAL DESCRIPTION

MATERIAL SIZE

FINISH

MASK M

SCALE

• THREAD DEPTHS ARE TO MIN FULL THDS
• DRILL DEPTHS ARE TO FULL DIA
• REMOVE BURRS AND SHARP EDGES
• DO NOT SCALE PRINT

MACHINED SURFACES 180 √

.XXX HOLE SIZE TOLERANCE: 0.000 TO .750 +.010/-.002; OVER .750 TO 1.500 +.015/-.003

GENERAL TOLERANCES: ANGLE ±2°; X/Y ±1/4; .X ±.1; .XX ±.03; .XXX ±.010

THIRD ANGLE PROJ.

MTS SYSTEMS CORPORATION
EDEN PRAIRIE, MINNESOTA U.S.A. ©

DRAWN	CHECK	ENGR	MFG
GSW		JAH	
DATE 09-29-09	DATE	DATE 09-29-09	DATE

TITLE
INTERCONNECT DIAG- FACILITY SAFETY, 39367

NEXT LEVEL

PRODUCT CODE

SIZE	NUMBER	REV
D	700-005-000	A

SHEET 1 OF 4

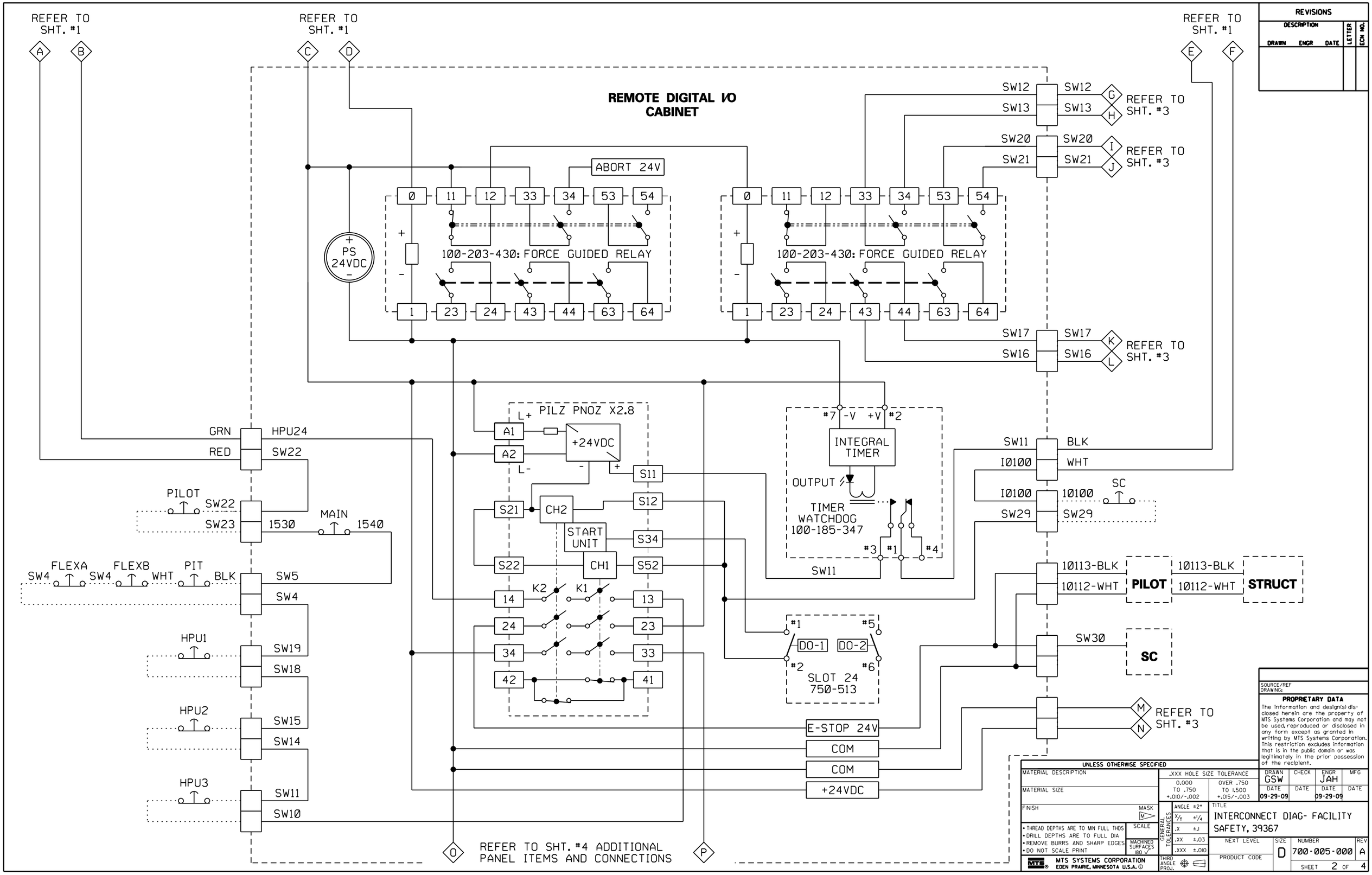

REVISIONS

DESCRIPTION			LETTER	ECN NO.
DRAWN	ENGR	DATE		

SOURCE/REF DRAWING:

PROPRIETARY DATA

The information and design(s) disclosed herein are the property of MTS Systems Corporation and may not be used, reproduced or disclosed in any form except as granted in writing by MTS Systems Corporation. This restriction excludes information that is in the public domain or was legitimately in the prior possession of the recipient.

UNLESS OTHERWISE SPECIFIED

MATERIAL DESCRIPTION

MATERIAL SIZE

FINISH

MASK

SCALE

- THREAD DEPTHS ARE TO MIN FULL THDS
- DRILL DEPTHS ARE TO FULL DIA
- REMOVE BURRS AND SHARP EDGES
- DO NOT SCALE PRINT

MACHINED SURFACES 180 √

GENERAL TOLERANCES

.XXX HOLE SIZE TOLERANCE	
0.000 TO .750 +.010/-.002	OVER .750 TO 1.500 +.015/-.003

ANGLE	±2°
X/Y	±1/4
.X	±.1
.XX	±.03
.XXX	±.010

THIRD ANGLE PROJ.

MTS SYSTEMS CORPORATION
EDEN PRAIRIE, MINNESOTA U.S.A. ©

DRAWN	CHECK	ENGR	MFG
GSW		JAH	
DATE 09-29-09	DATE	DATE 09-29-09	DATE

TITLE
INTERCONNECT DIAG- FACILITY SAFETY, 39367

NEXT LEVEL

PRODUCT CODE

SIZE	NUMBER	REV
D	700-005-000	A

SHEET 2 OF 4

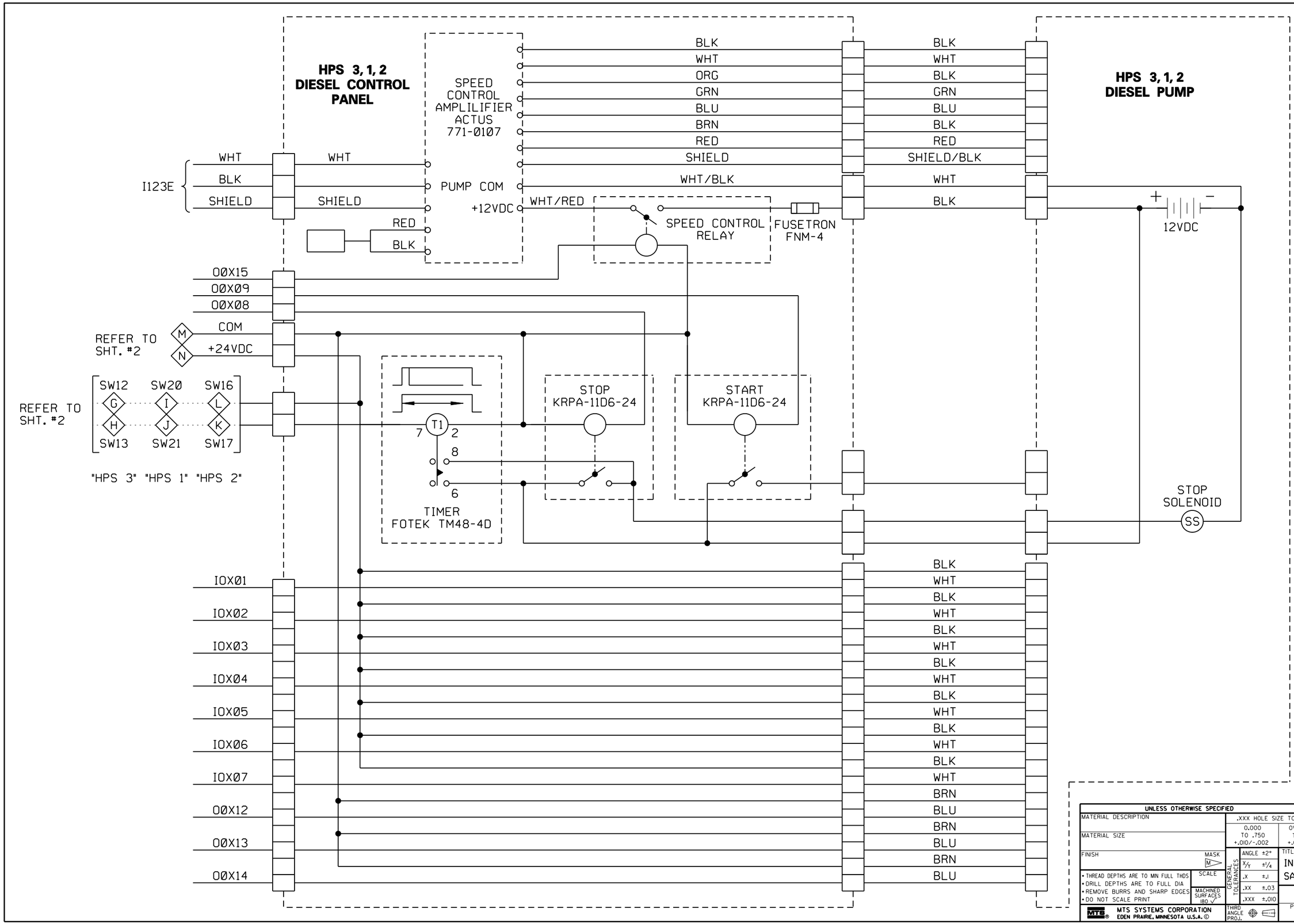

REVISIONS				
DESCRIPTION			LETTER	ECN NO.
DRAWN	ENGR	DATE		

SOURCE/REF DRAWING:

PROPRIETARY DATA

The information and design(s) disclosed herein are the property of MTS Systems Corporation and may not be used, reproduced or disclosed in any form except as granted in writing by MTS Systems Corporation. This restriction excludes information that is in the public domain or was legitimately in the prior possession of the recipient.

UNLESS OTHERWISE SPECIFIED

MATERIAL DESCRIPTION

MATERIAL SIZE

FINISH — MASK M

- THREAD DEPTHS ARE TO MIN FULL THDS
- DRILL DEPTHS ARE TO FULL DIA
- REMOVE BURRS AND SHARP EDGES
- DO NOT SCALE PRINT

SCALE

MACHINED SURFACES 180 √

GENERAL TOLERANCES: ANGLE ±2°; X/Y ±1/4; .X ±.1; .XX ±.03; .XXX ±.010

.XXX HOLE SIZE TOLERANCE: 0.000 TO .750 +.010/-.002; OVER .750 TO 1.500 +.015/-.003

THIRD ANGLE PROJ.

MTS SYSTEMS CORPORATION
EDEN PRAIRIE, MINNESOTA U.S.A. ©

DRAWN	CHECK	ENGR	MFG
GSW		JAH	
DATE 09-29-09	DATE	DATE 09-29-09	DATE

TITLE
INTERCONNECT DIAG- FACILITY SAFETY, 39367

NEXT LEVEL

PRODUCT CODE

SIZE	NUMBER	REV
D	700-005-000	A

SHEET 3 OF 4

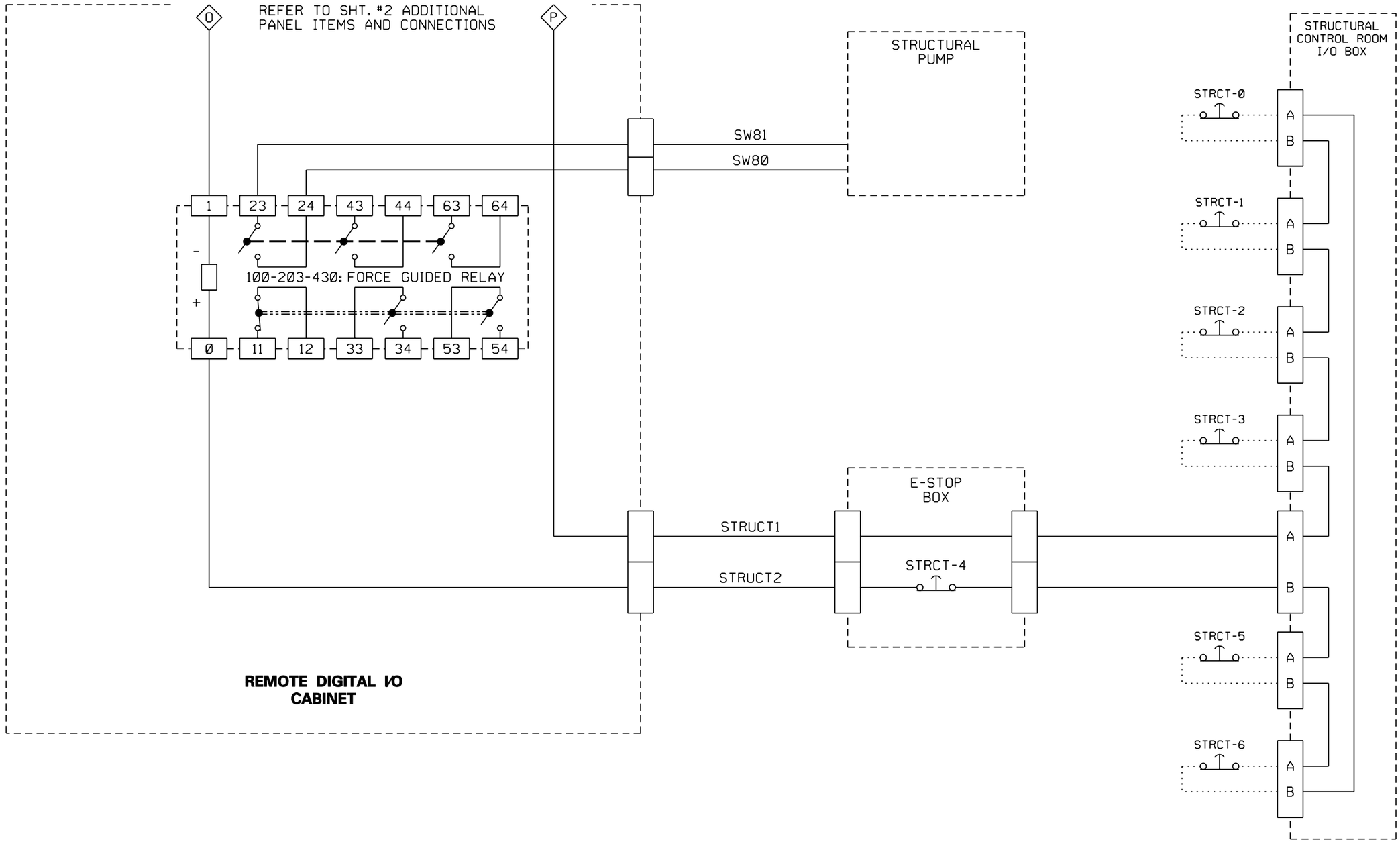

REVISIONS				
DESCRIPTION			LETTER	ECN NO.
DRAWN	ENGR	DATE		

SOURCE/REF DRAWING:

PROPRIETARY DATA

The information and design(s) disclosed herein are the property of MTS Systems Corporation and may not be used, reproduced or disclosed in any form except as granted in writing by MTS Systems Corporation. This restriction excludes information that is in the public domain or was legitimately in the prior possession of the recipient.

UNLESS OTHERWISE SPECIFIED

MATERIAL DESCRIPTION

MATERIAL SIZE

FINISH — MASK M

- THREAD DEPTHS ARE TO MIN FULL THDS
- DRILL DEPTHS ARE TO FULL DIA
- REMOVE BURRS AND SHARP EDGES
- DO NOT SCALE PRINT

SCALE

MACHINED SURFACES 180 √

MTS SYSTEMS CORPORATION
EDEN PRAIRIE, MINNESOTA U.S.A. ©

.XXX HOLE SIZE TOLERANCE	
0.000 TO .750 +.010/-.002	OVER .750 TO 1.500 +.015/-.003

GENERAL TOLERANCES: ANGLE ±2°; X/Y ±1/4; .X ±.1; .XX ±.03; .XXX ±.010

THIRD ANGLE PROJ.

DRAWN	CHECK	ENGR	MFG
GSW		JAH	
DATE 09-29-09	DATE	DATE 09-29-09	DATE

TITLE
INTERCONNECT DIAG- FACILITY SAFETY, 39367

NEXT LEVEL

PRODUCT CODE

SIZE D

NUMBER 700-005-000 REV A

SHEET 4 OF 4